Rocky40/50 Discrete VGA Block Diagram
2007/12/20

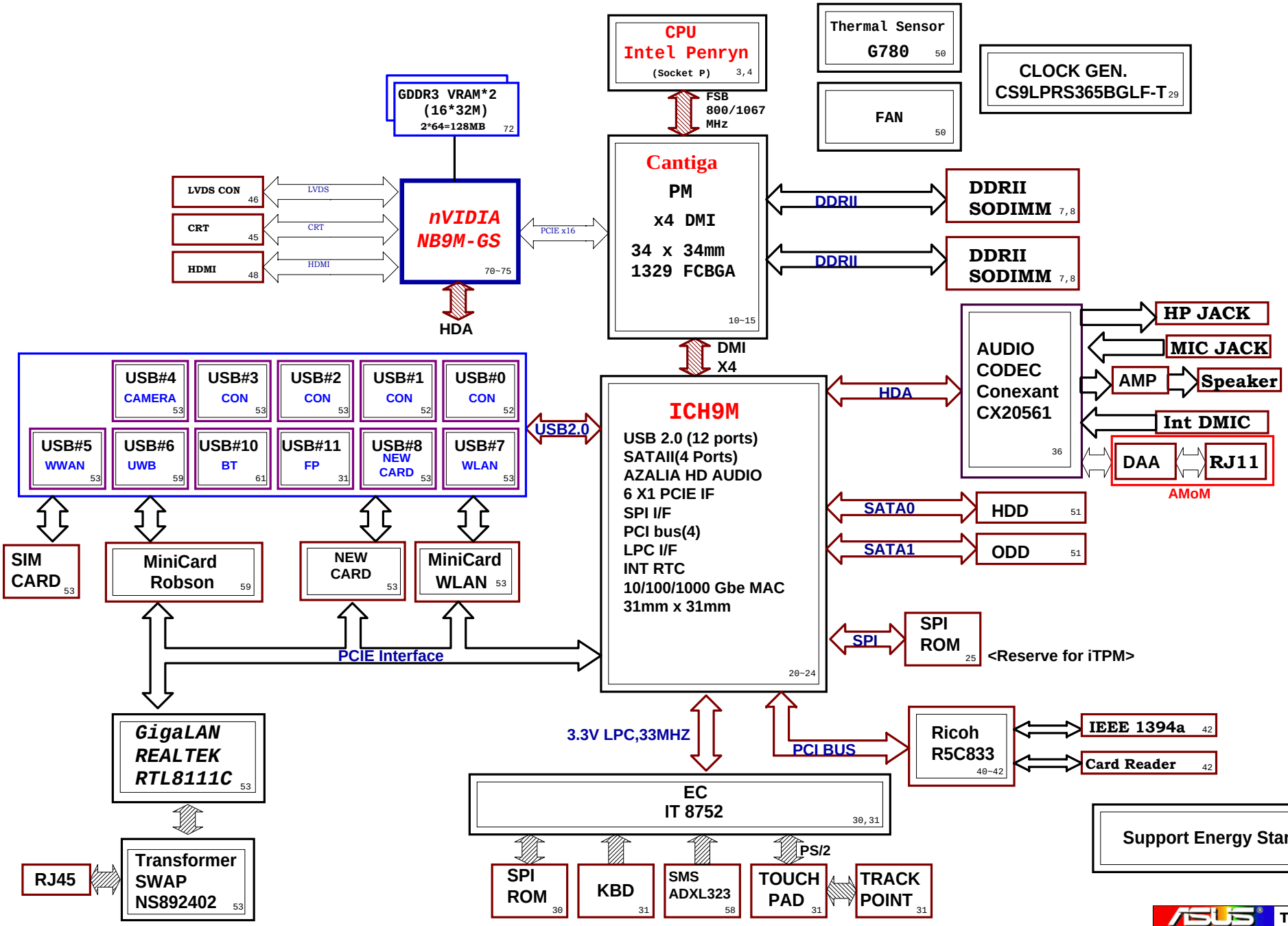

Title : Block Diagram		
Engineer: Tina Lee		
Size: Custom	Project Name: Rocky 40/50	Rev: 1.0
Date: Thursday, December 20, 2007	Sheet 1 of 94	

WWW.AliSaler.Com

Rocky 40/50 Schematic Index

Page	System page Ref.
01	Block Diagram
02	Schematic Information
03-05	CPU-Penryn
07-09	DDR III SO-DIMM
10-15	Cantiga
20-24	ICH9M
25	SPI ROM
29	CLK-ICS9LPRS365BGLFT
30-31	EC_IT8752
32	POWER-ON SEQUENCE
33	LAN_RTL811C***
34	RJ45***
35	MDC***
36	CODEC-CX20561
37	AUDIO_AMP-G1431F2U
38	MICROPHONE & SPEAKER CONN
39	DSP***
40	CARDBUS R5C833(PCI I/F)
41	CARDBUS R5C833(1394 & SD)
42	IEEE1394A & 4 IN1 CON
43	NewCard PWR SW & CON***
44	Debug
45	CRT
46	LVDS & INVERTER CONNECTOR
47	TV OUT CONN***
50	THER SENSOR & FAN
51	HDD & CDROM
52	USB Port x 2
53	IO BOARD
54	PORT Docking***
55	Super I/O & FIR
56	LED
57	DISCHARGE
58	SMS
60	DC power jack, Batter conn.
61	Blue Tooth
62	TPM***
65	MDC NUT & Hinksink NUT***
66	E-SATA***
68	XDP***
80	POWER_VCORE
81	POWER_SYSTEM
82	POWER_I/O_1.8VS & VCCP
83	POWER_I/O_DDR & VTT
84	POWER_I/O_***
85	PWR_VGA_CORE & 1.1V
87	POWER_SHUTDOWN#
88	POWER_CHARGER
90	POWER_DETECT
91	POWER_LOAD SWITCH
92	POWER_PROTECT
93	POWER_SIGNAL
94	POWER_FLOWCHART

ICH9-M GPIO	Use As	Signal Name	Power
GPIO 00	GPI	PM_SYNC#	+3VS
GPIO 01	GPI	-	+3VS
GPIO [2:5]	GPI	PCI_INT[E:H]#	+3VS
GPIO 06	GPI		+3VS
GPIO 07	GPI		+3VS
GPIO 08	GPI	EXT_SMI#	+3VSUS
GPIO 09	Native	UWB_ON	+3VSUS
GPIO 10	GPI	-	+3VSUS
GPIO 11	Native	EXT_SCI#	+3VSUS
GPIO 12	GPO	-	+3VSUS
GPIO 13	GPI	CB_SD#	+3VSUS
GPIO 14	GPI	RTLAN_DSM#	+3VSUS
GPIO 15	Native	-	+3VSUS
GPIO 16	Native	PM_DPRSLPVR	+3VS
GPIO 17	GPI	WLAN_LED	+3VS
GPIO 18	GPO	-	+3VS
GPIO 19	GPI	-	+3VS
GPIO 20	GPO	-	+3VS
GPIO 21	GPI	-	+3VS
GPIO 22	GPI	BT_DET#	+3VS
GPIO 23	Native	-	+3VS
GPIO 24	GPO	WLAN_ON	+3VSUS
GPIO 25	Native	-	+3VSUS
GPIO 26	Native	-	+3VSUS
GPIO 27	GPO	BT_ON	+3VSUS
GPIO 28	GPO	-	+3VSUS
GPIO 29	Native	USB_OC5#	+3VSUS
GPIO 30	Native	USB_OC6#	+3VSUS
GPIO 31	Native	USB_OC7#	+3VSUS
GPIO 32	GPO	-	+3VS
GPIO 33	GPO	-	+3VS
GPIO 34	GPO	-	+3VS
GPIO 35	GPO	CLK_SATA_REQ#	+3VS
GPIO 36	GPI	-	+3VS
GPIO 37	GPI	PCB_ID0	+3VS
GPIO 38	GPI	PCB_ID1	+3VS
GPIO 39	GPI	PCB_ID2	+3VS
GPIO 40	Native	USB_OC1#	+3VSUS
GPIO 41	Native	USB_OC2#	+3VSUS
GPIO 42	Native	USB_OC3#	+3VSUS
GPIO 43	Native	USB_OC4#	+3VSUS
GPIO 44	Native	USB_OC8#	N/A
GPIO 45	Native	USB_OC9#	N/A
GPIO 46	Native	USB_OC10#	N/A
GPIO 47	Native	USB_OC11#	N/A
GPIO 48	GPI	-	+3VS
GPIO 49	GPO	GPU_RST#	**+3VS**
GPIO 50	Native	PCI_REQ#1	+3VS
GPIO 51	Native	-	+3VS
GPIO 52	Native	PCI_REQ#2	+3VS
GPIO 53	Native	-	+3VS
GPIO 54	Native	PCI_REQ#3	+3VS
GPIO 55	Native	-	+3VS
GPIO 56	GPI	-	+3VSUS
GPIO 57	GPI	-	+3VSUS
GPIO 58	GPI	-	+3VSUS
GPIO 59	Native	USB_OC0#	+3VSUS
GPIO 60	Native	RTLAN_DSM_EN	+3VSUS

EC GPIO	Use As	Signal Name	Power
GPA0	GPO	PWR_LED#	
GPA1	GPO	CHG_LED#	
GPA2	GPO	BATSEL_3S#	
GPA3	-	NOVO_CARE_LED#	
GPA4	GPO	LCD_BL_PWM	
GPA5	GPO	FAN_PWM	
GPA6	GPO	-	
GPA7	GPO	-	
GPB0	GPO	CHG_EN#	
GPB1	GPO	PRECHG	
GPB2	GPI	-	
GPB3	ALT	SMB0_CLK	
GPB4	ALT	SMB0_DAT	
GPB5	OD	A20GATE	
GPB6	OD	RCIN#	
GPB7	GPO	PM_RSMRST#	
GPC0	GPI	-	
GPC1	ALT	SMB1_CLK	
GPC2	ALT	SMB1_DAT	
GPC3	GPO	PM_PWRBTN#	
GPC4	ALT	AC_IN_OC#	
GPC5	GPO	OP_SD#	
GPC6	ALT	BAT1_IN_OC#	
GPC7	GPO	RFON_SW#	
GPD0	GPI	PWRLIMIT#	
GPD1	ALT	PM_SUSC#	
GPD2	ALT	BUF_PLT_RST#	
GPD3	OD	EXT_SCI#	
GPD4	OD	EXT_SMI#	
GPD5	GPO	LCD_BACKOFF#	
GPD6	ALT	FAN0_TACH	
GPD7	GPI	-	
GPE0	GPO	VSUS_ON	
GPE1	GPO	SUSC_EC#	
GPE2	GPO	SUSB_EC#	
GPE3	GPO	CPU_VRON	
GPE4	ALT	PWR_SW#	
GPE5	ALT	-	
GPE6	GPI	LID_SW#	
GPE7	GPO	MEDIA_KEY#	
GPF0	GPI	-	
GPF1	GPI	NOVO_CARE#	
GPF2	ALT	TP1_CLK	
GPF3	ALT	TP1_DAT	
GPF4	ALT	TP_CLK	
GPF5	ALT	TP_DAT	
GPF6	GPO	THRO_CPU	
GPF7	GPO	SUSPEND_LED#	
GPG0	GPI	PM_THERM#_EC	
GPG1	ALT	PM_SUSB#	
GPG2	GPO	BAT1_CNT2#	
-	-	-	
-	-	-	

EC GPIO	Use As	Signal Name	Power
-	-	-	
GPG6	GPO	-	
-	-	-	
GPH0	OD	PM_CLKRUN#	
GPH1	ALT	3G_ON#	
GPH2	ALT	LOGO_LED#	
GPH3	GPO	BAT_LEARN	
GPH4	GPO	-	
GPH5	GPO	NUM_LED#	
GPH6	GPO	CAP_LED#	
-	-	-	
GPI0	GPI	NV_OVERT#	
GPI1	GPI	SUS_PWRGD	
GPI2	GPI	ALL_SYSTEM_PWRGD	
GPI3	GPI	VRM_PWRGD	
GPI4	GPI	XOUT	
GPI5	GPI	YOUT	
GPI6	GPI	-	
GPI7	GPI	-	
GPJ0	GPO	EC_CLK_EN	
GPJ1	GPO	PM_PWROK	
GPJ2	GPI	-	
GPJ3	-	-	
GPJ4	GPO	BL_DA	
GPJ5	GPO	PWR_LED#	
GPK0	GPI	-	
GPK1	GPI	-	
GPK2	GPI	-	
GPK3	GPI	-	
GPK4	GPI	-	
GPK5	GPI	-	
GPL0	GPI	APS_PWR_CNT#	
GPL1	GPI	APS_ST#	
GPL2	GPO	USB_PWR_EN#	
GPL3	GPO	-	
GPL4	GPO	-	
GPL5	GPO	AC_ID	
GPL6	GPO	AC_65W	
GPL7	GPO	CHG_LOW_LED#	
GPK6	GPO	-	
GPK7	GPI	-	

ASUS	Title : Schematic Information		
	Engineer: Tina Lee		
Size: Custom	Project Name: Rocky 40/50		Rev: 1.0
Date: Wednesday, December 19, 2007	Sheet 2 of 94		

WWW.AliSaler.Com

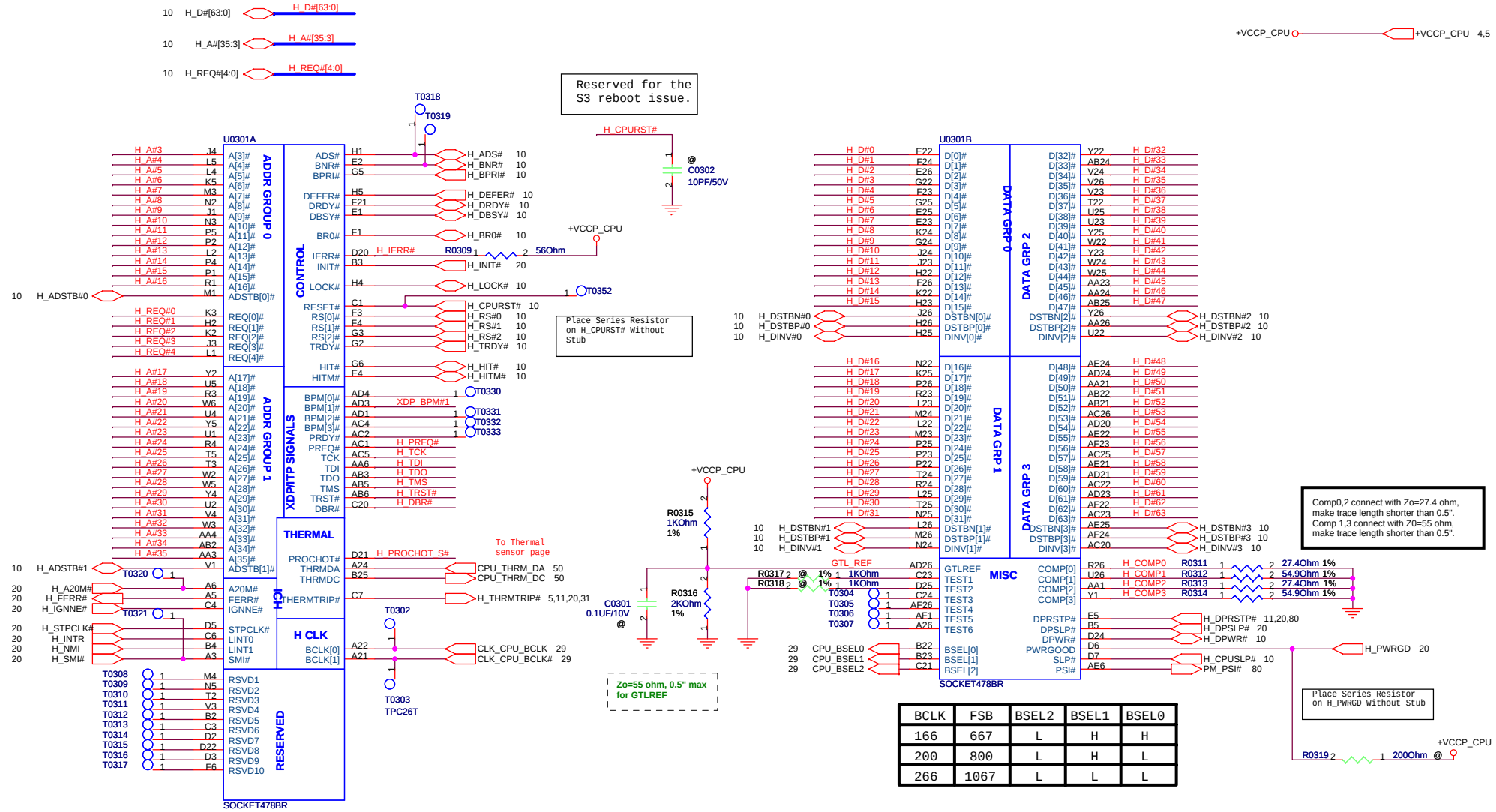

BCLK	FSB	BSEL2	BSEL1	BSEL0
166	667	L	H	H
200	800	L	H	L
266	1067	L	L	L

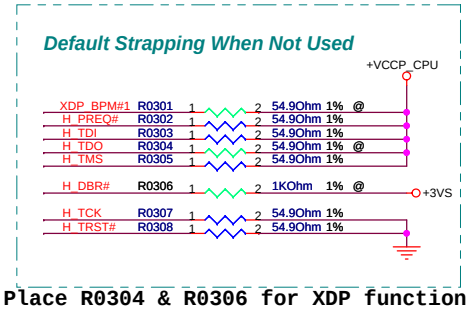

Place R0304 & R0306 for XDP function

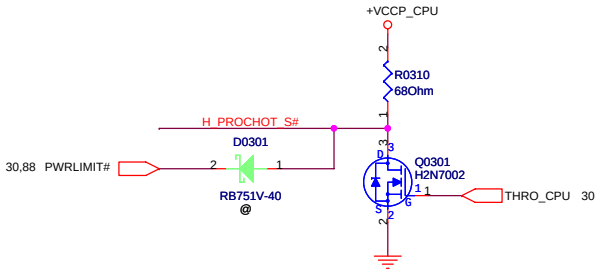

Title :	Penryn CPU (1)
Engineer:	Tina Lee
Size	Custom
Project Name	Rocky 40/50
Rev	1.0
Date:	Thursday, December 20, 2007
Sheet	3 of 94

WWW.AliSaler.Com

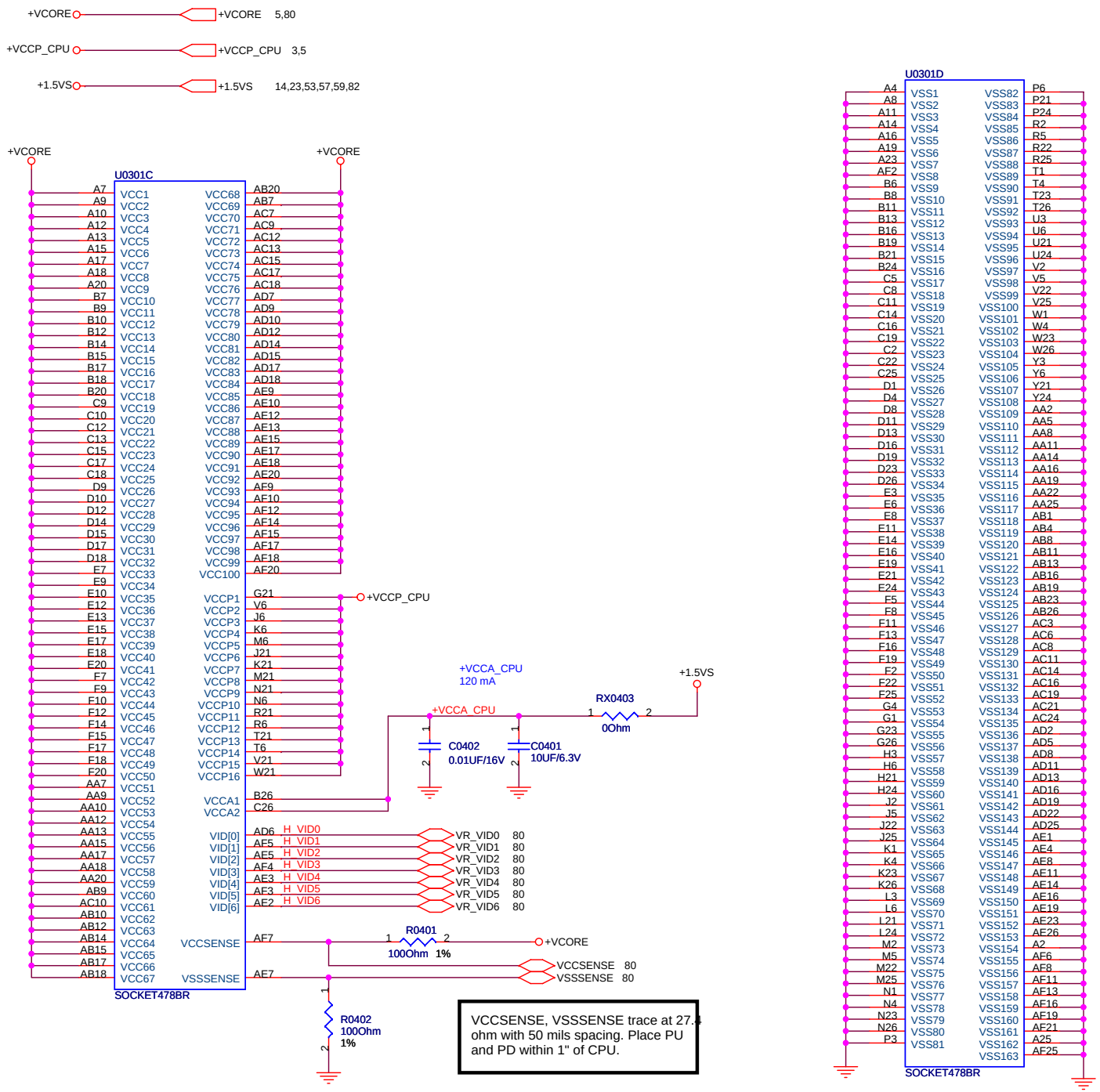

Title : Penryn CPU (2)		
Engineer: Tina Lee		
Size: Custom	Project Name: Rocky 40/50	Rev: 1.0
Date: Thursday, December 20, 2007	Sheet 4 of 94	

WWW.AliSaler.Com

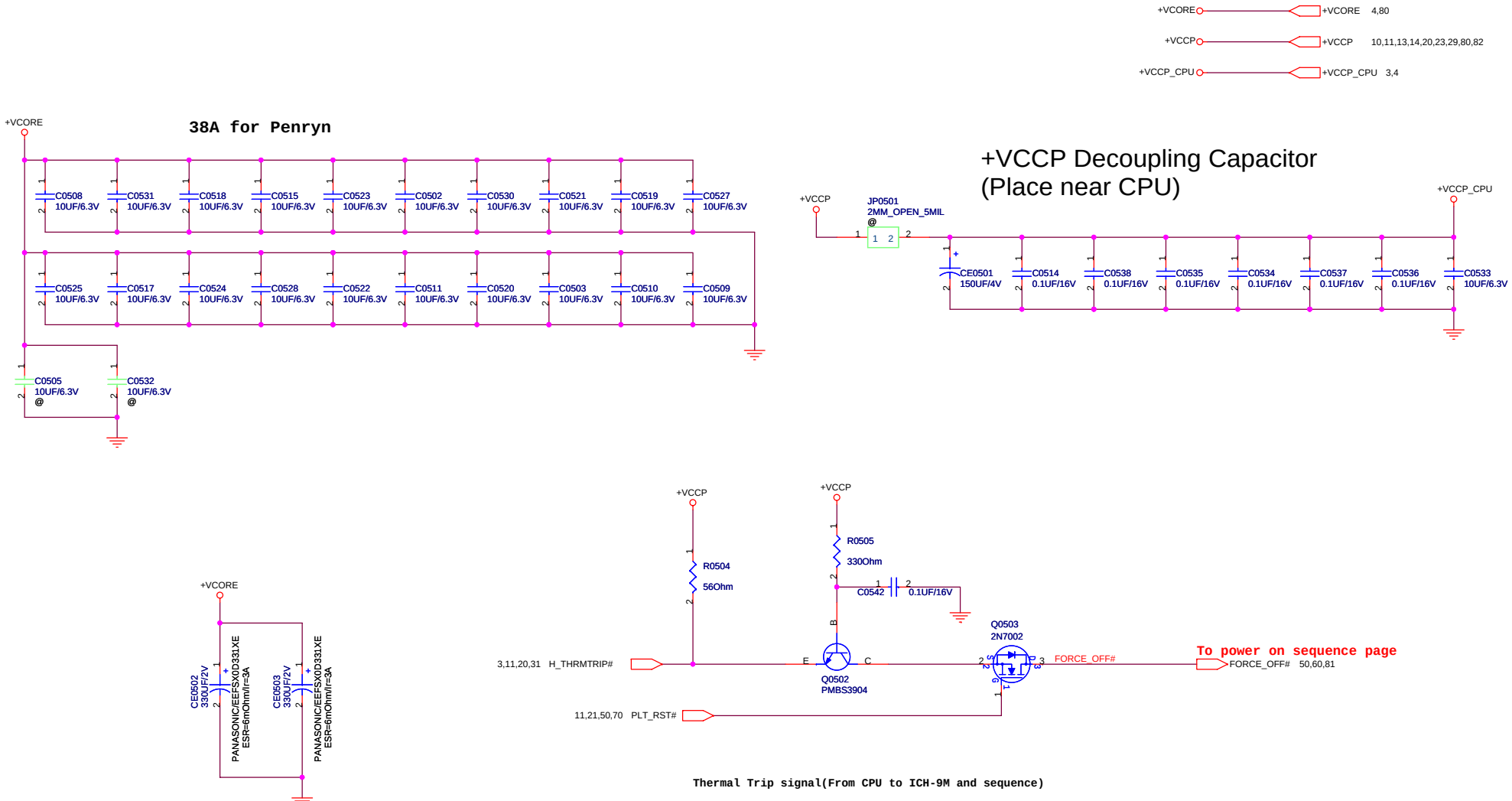

ASUS	Title : CPU CAPS	
	Engineer: Tina Lee	
Size: Custom	Project Name: Rocky 40/50	Rev: 1.0
Date: Thursday, December 20, 2007	Sheet 5 of 94	

WWW.AliSaler.Com

ASUS	Title :		
	Engineer: Tina Lee		
Size A4	Project Name Rocky 40/50		Rev 1.0
Date: Monday, December 17, 2007		Sheet 6 of 94	

WWW.AliSaler.Com

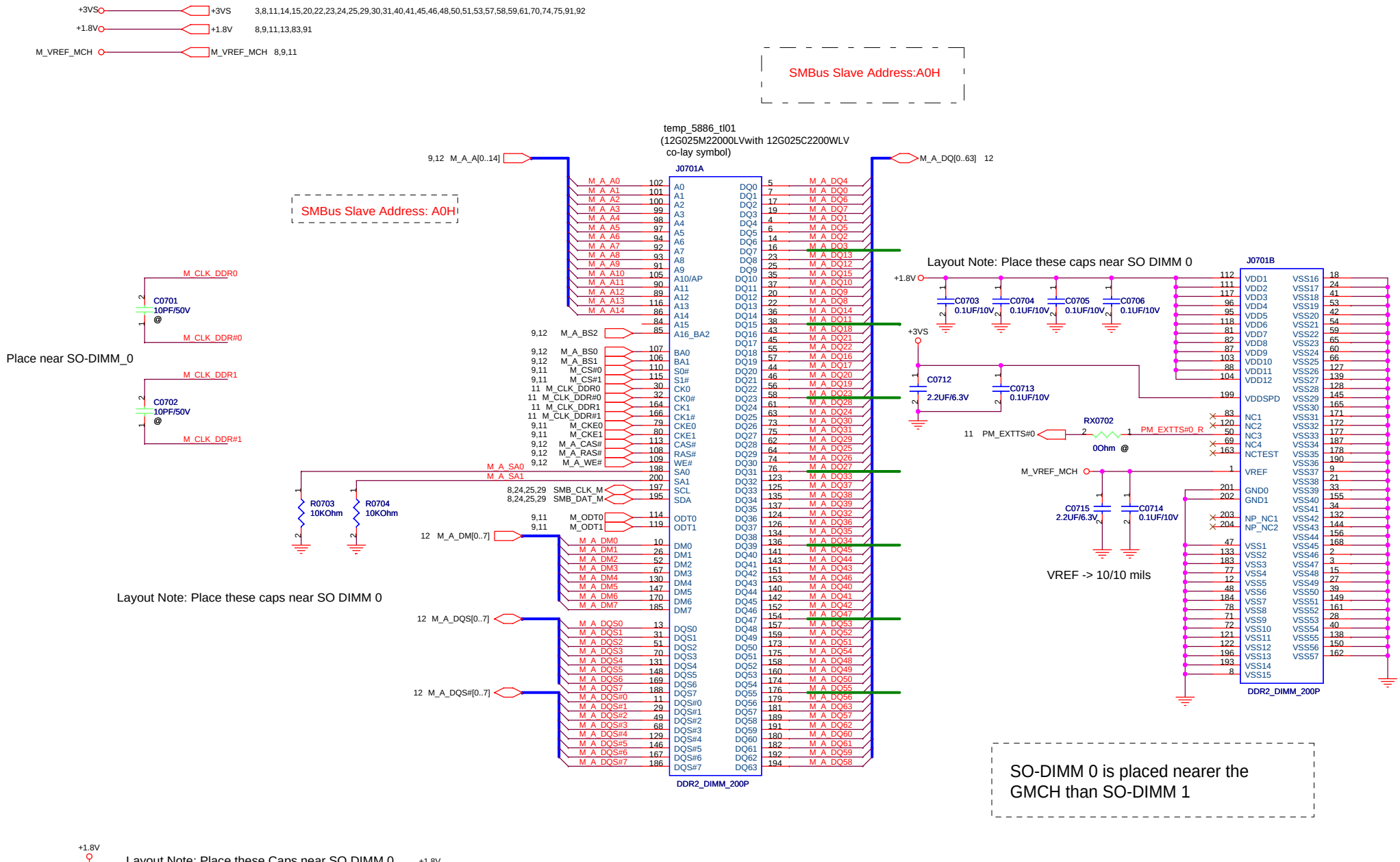

WWW.AliSaler.Com

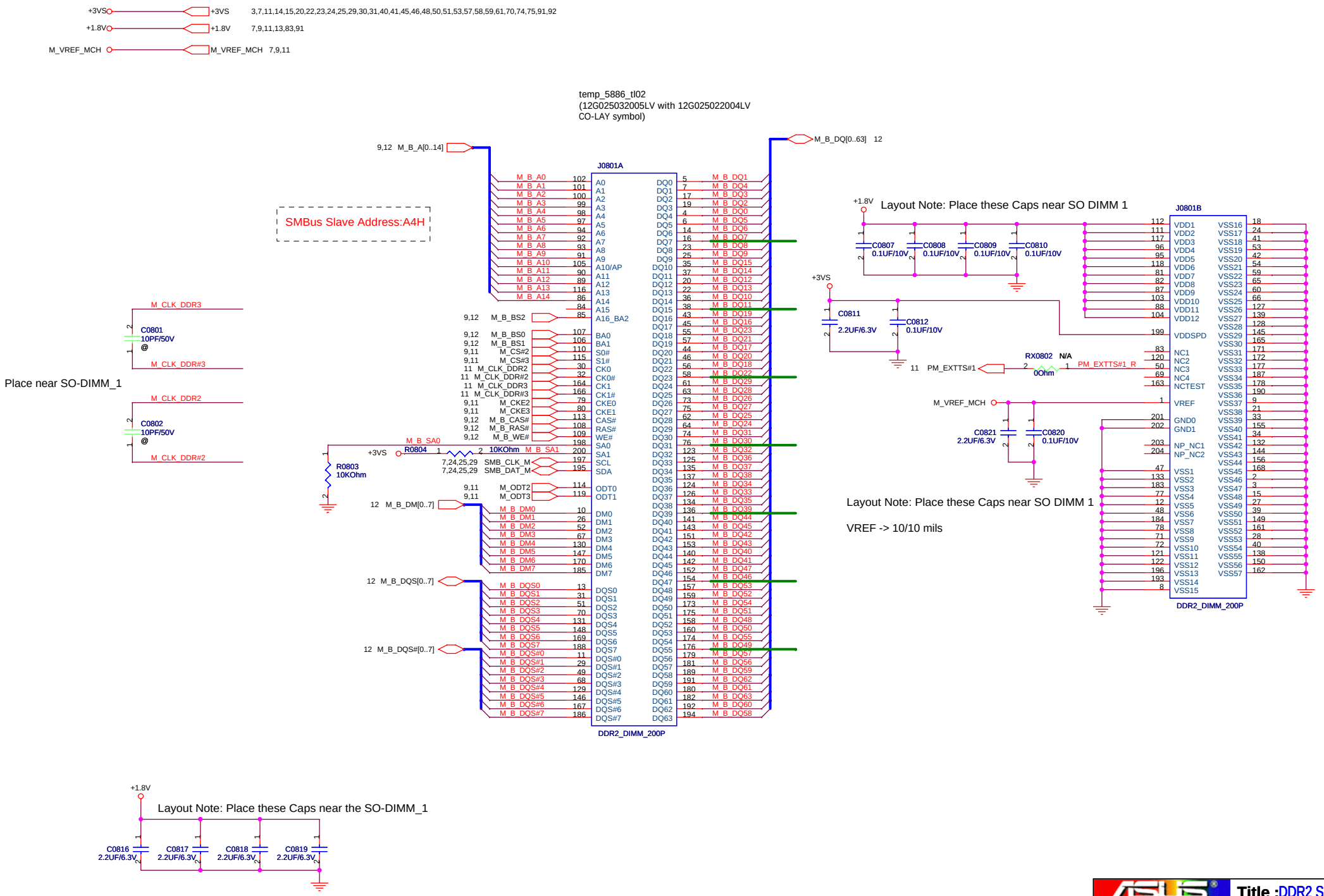

ASUS	Title : DDR2 SO-DIMM_1	
	Engineer: Tina Lee	
Size: Custom	Project Name: Rocky 40/50	Rev: 1.0
Date: Thursday, December 20, 2007	Sheet 8 of 94	

WWW.AliSaler.Com

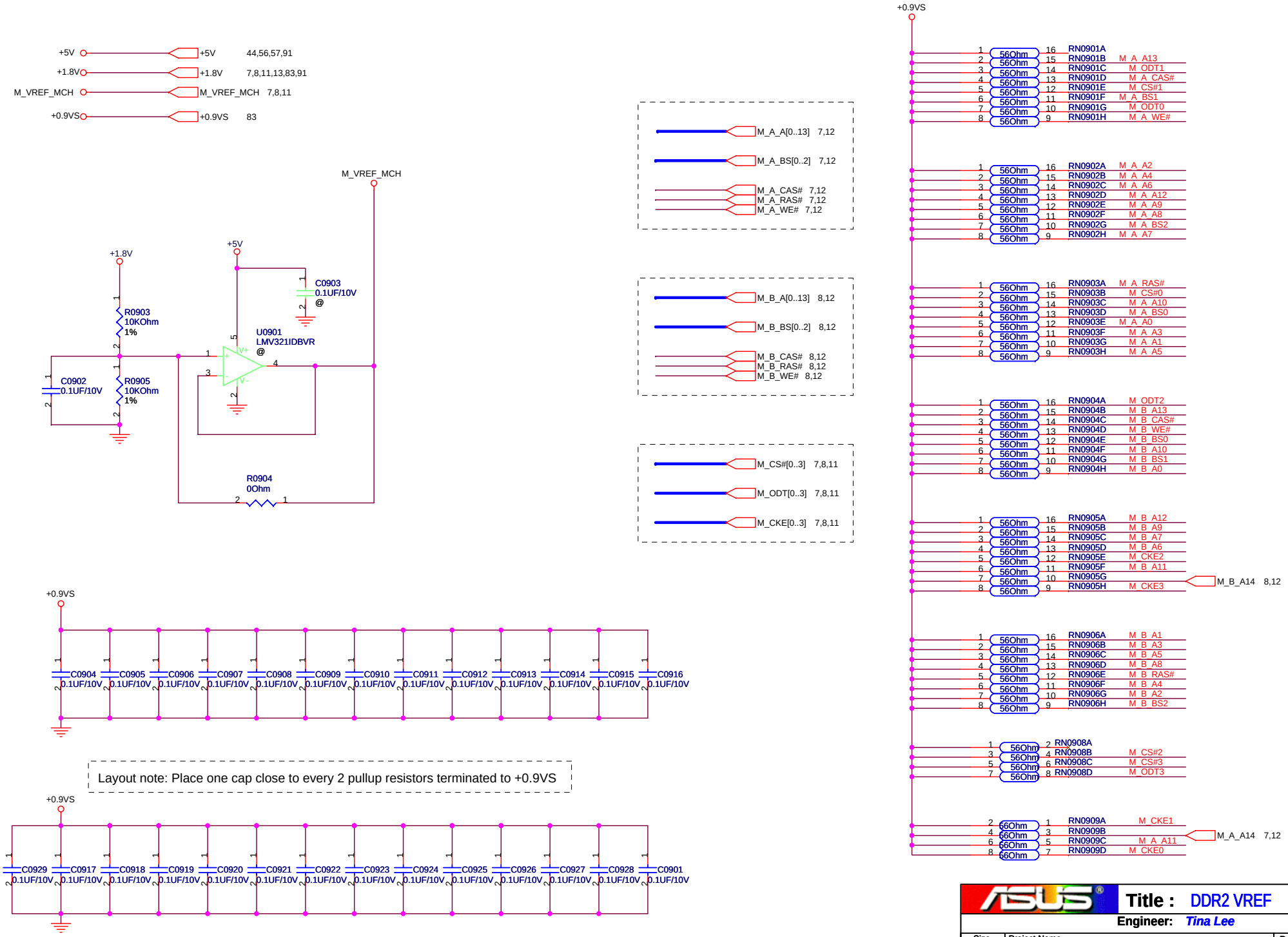

WWW.AliSaler.Com

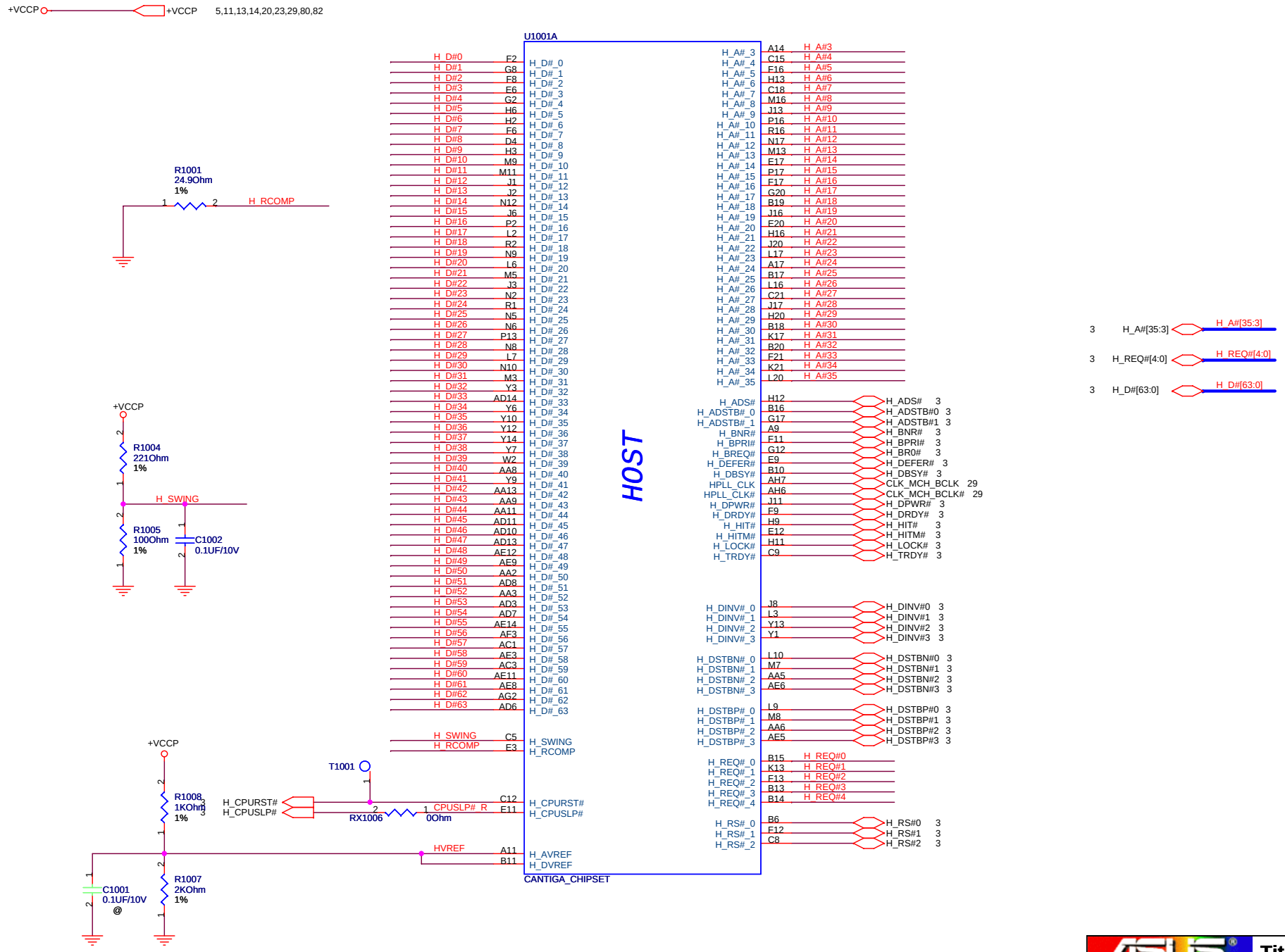

CAP 0.1U within 100 mils from GMCH

ASUS	Title : Cantiga -- CPU (1)		
	Engineer: Tina Lee		
Size: Custom	Project Name: Rocky 40/50		Rev: 1.0
Date: Thursday, December 20, 2007	Sheet 10 of 94		

WWW.AliSaler.Com

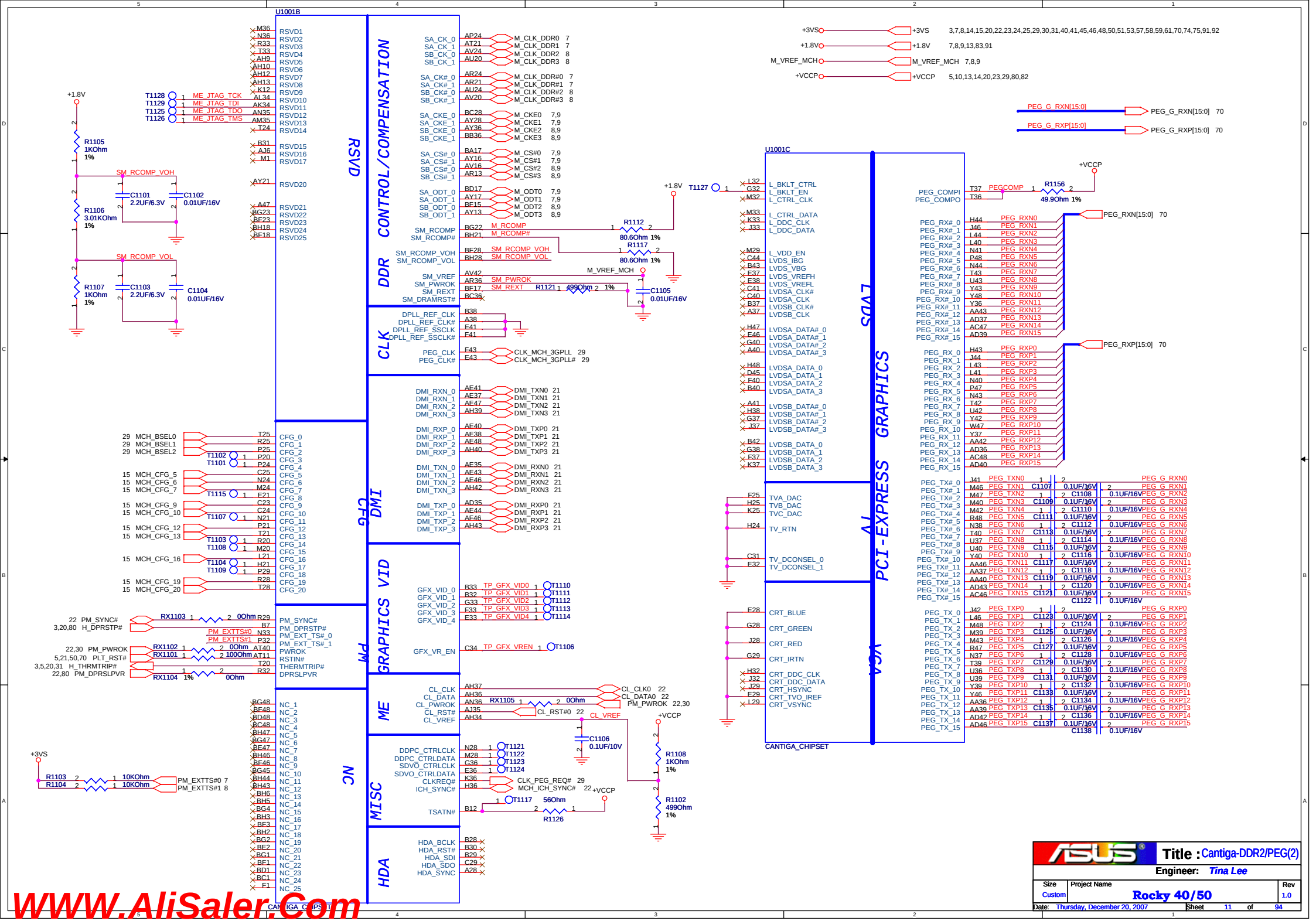

WWW.AliSaler.Com

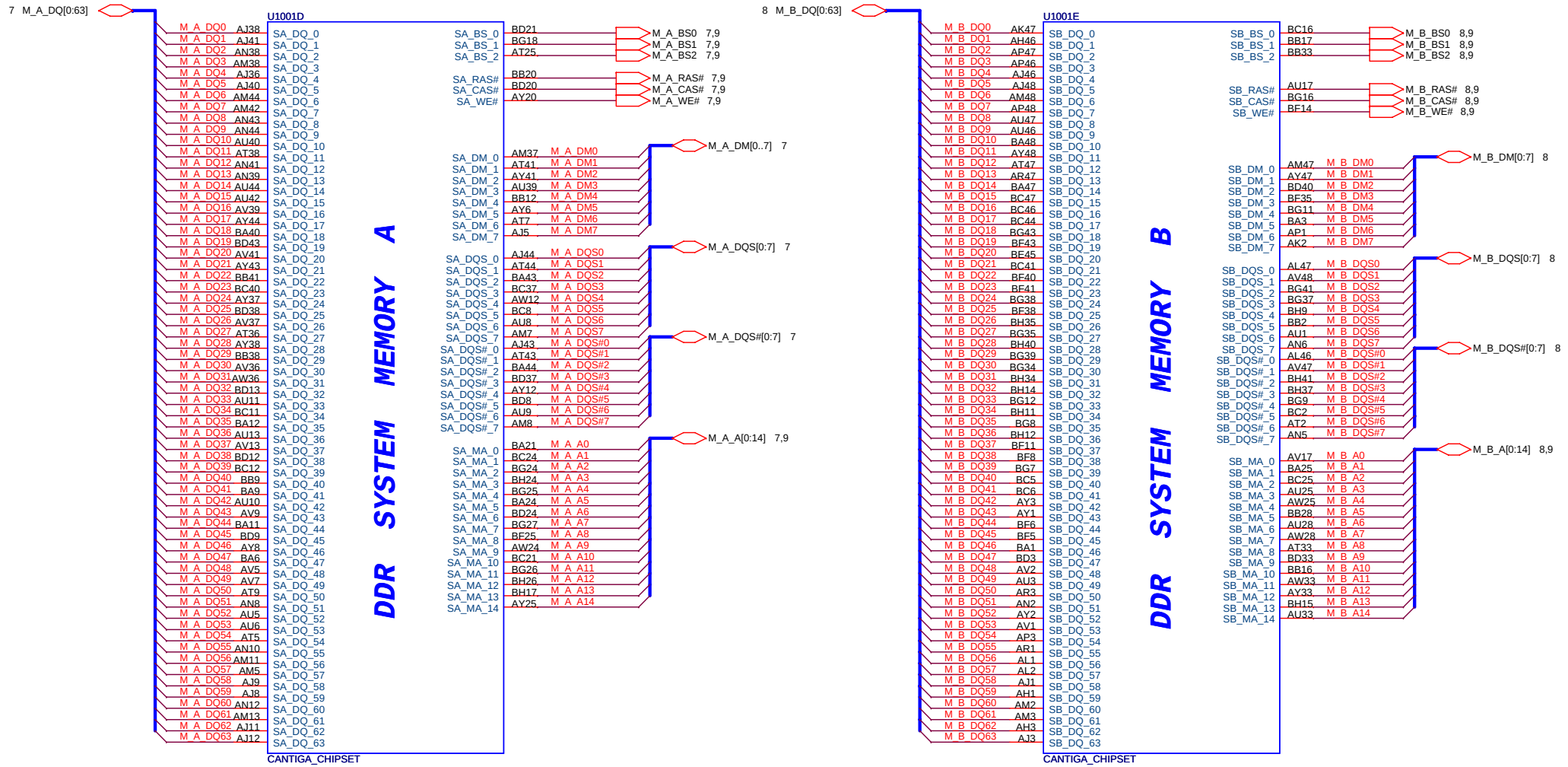

ASUS	Title : Cantiga--DDR3 (3)	
	Engineer: Tina Lee	
Size: Custom	Project Name: Rocky 40/50	Rev: 1.0
Date: Thursday, December 20, 2007	Sheet 12 of 94	

WWW.AliSaler.Com

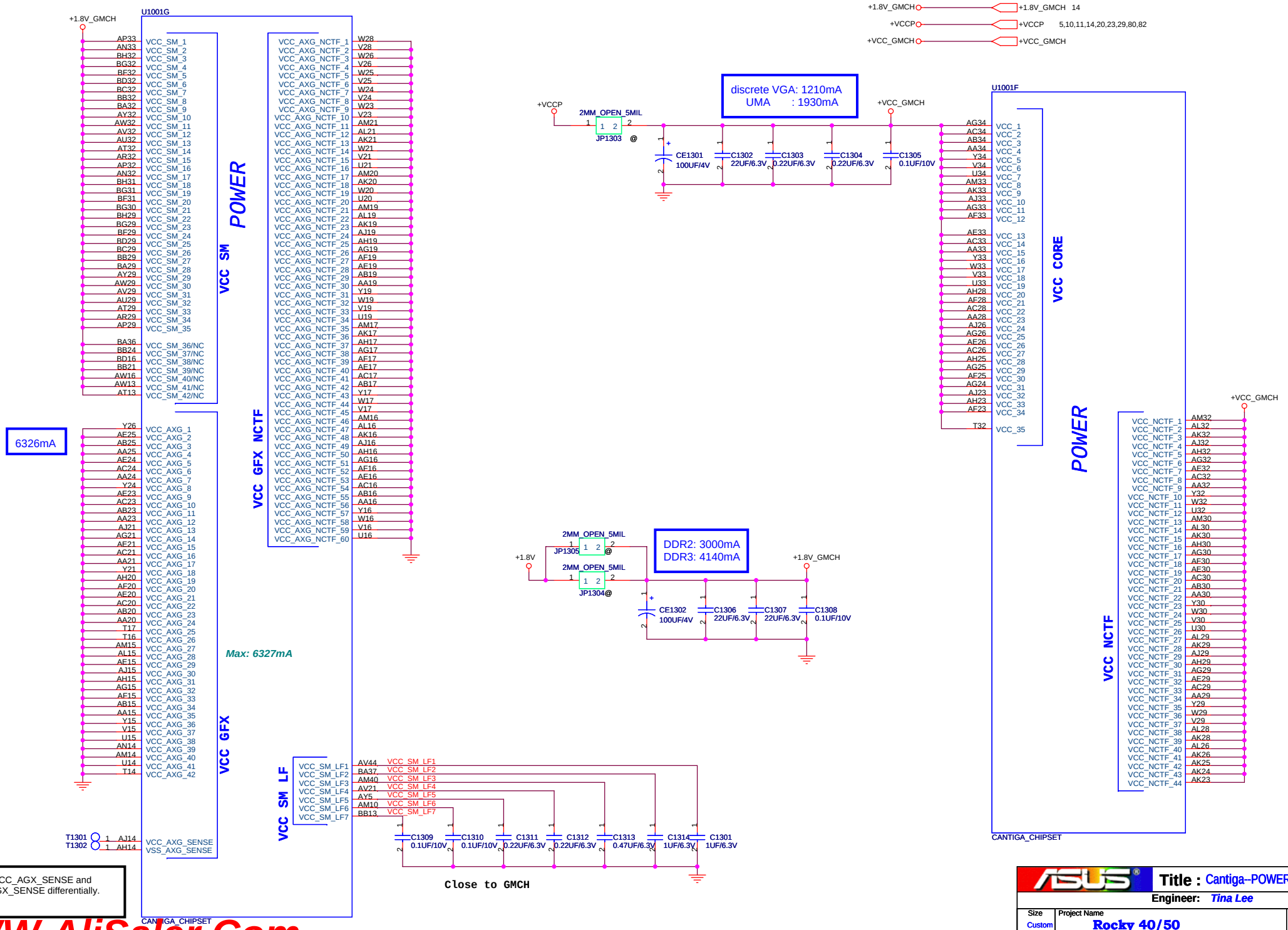

WWW.AliSaler.Com

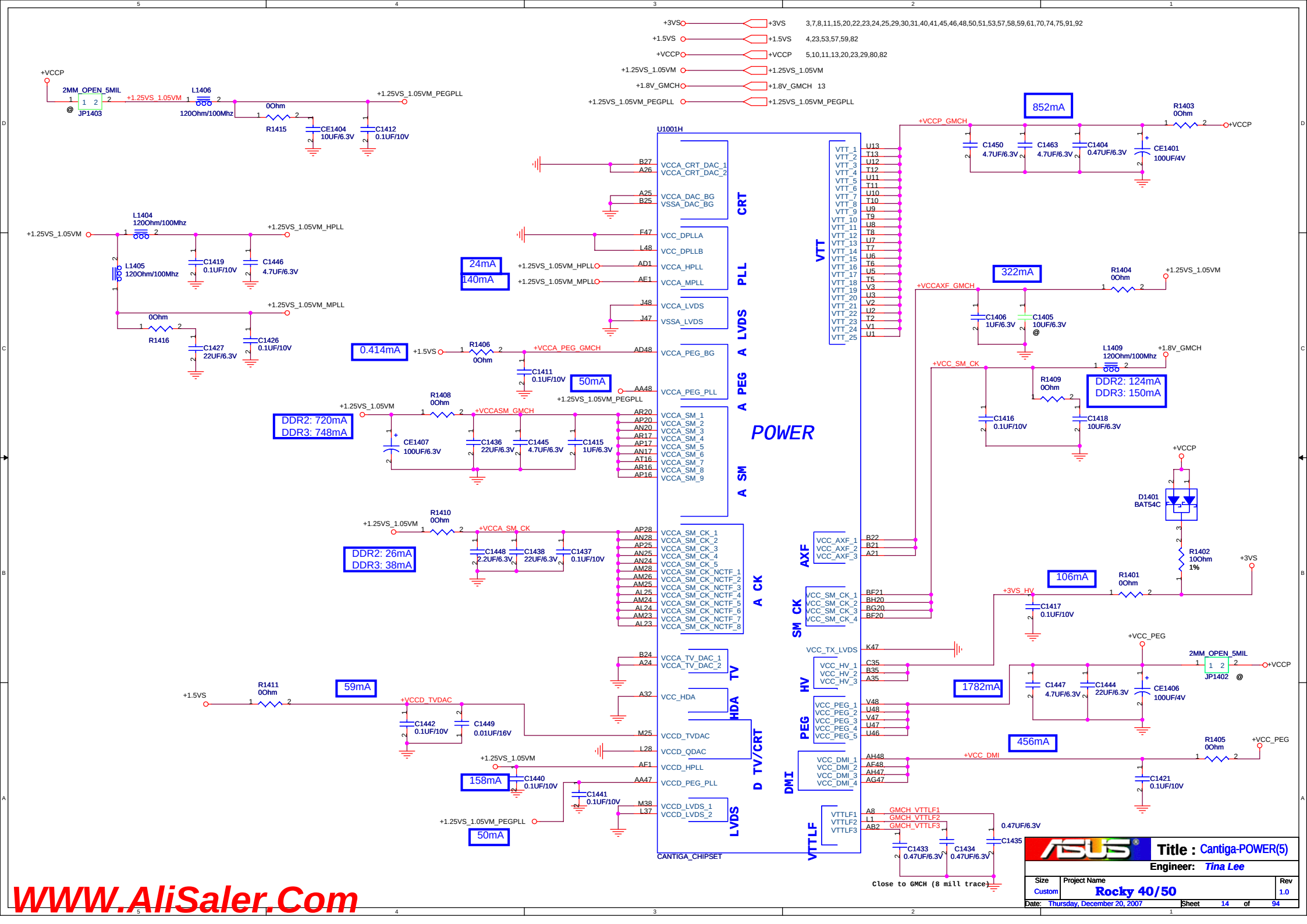

WWW.AliSaler.Com

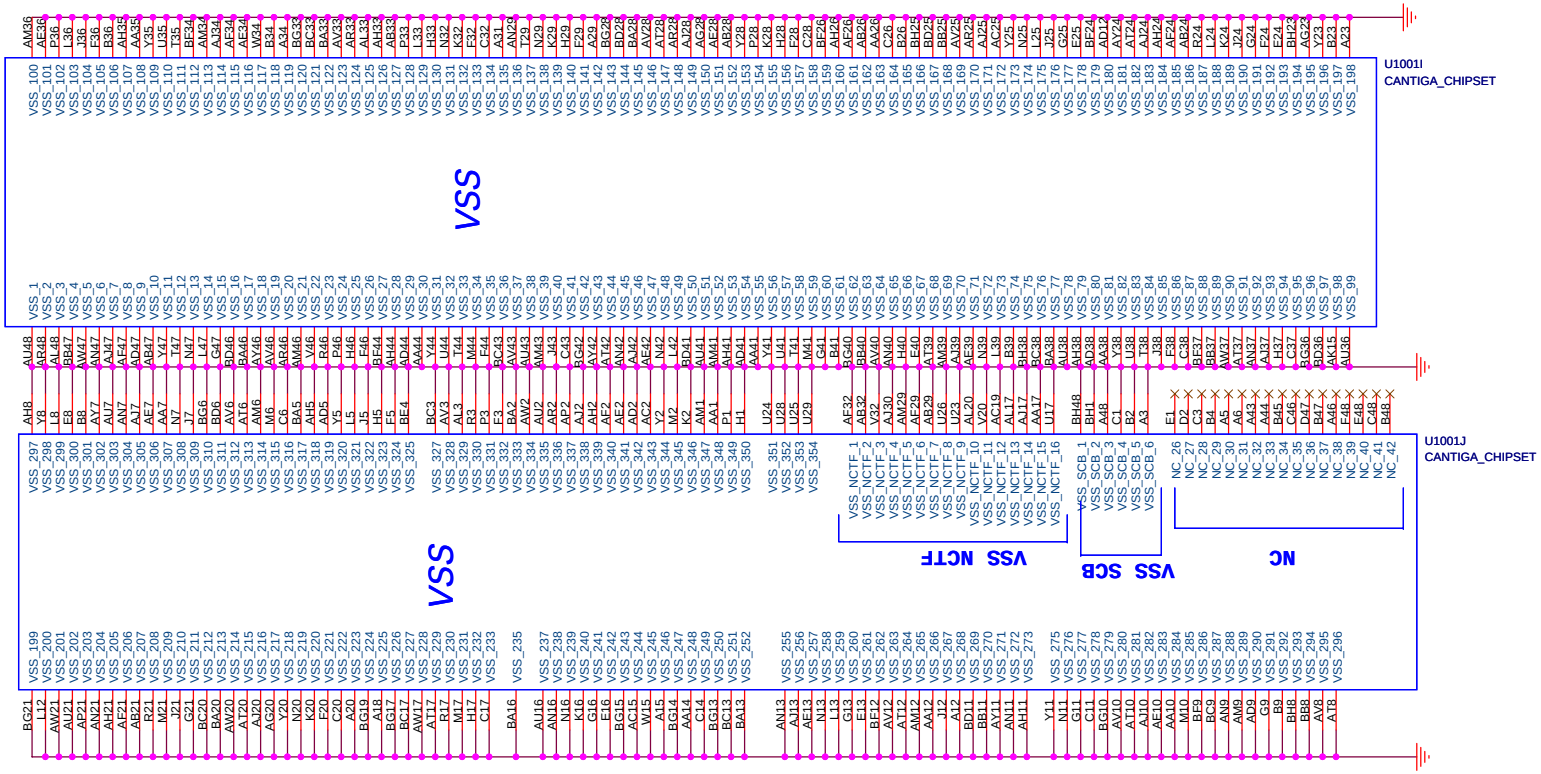

+3VS — +3VS 3,7,8,11,14,20,22,23,24,25,29,30,31,40,41,45,46,48,50,51,53

11 MCH_CFG_5 — R1509 2.21KOhm @ 1%

CFG5 : DMI STRAP
HIGH = DMI X 4 (Default)
LOW = DMI X 2

11 MCH_CFG_6 — R1514 2.21KOhm @ 1%

CFG6 : Integrated TPM Host Interface
HIGH = iTPM disable (Default)
LOW = iTPM enable

11 MCH_CFG_7 — R1511 2.21KOhm @ 1%

CFG7 : Intel ME Crypto Strap Transport Layer Security cipher suite
HIGH = With confidentiality (Default)
LOW = Without confidentiality

11 MCH_CFG_9 — R1512 2.21KOhm @ 1%

CFG9 : PCIE GRAPHIC LANE
LOW = Reverse Lanes
HIGH = Normal Operation (Default)

11 MCH_CFG_16 — R1507 2.21KOhm @ 1%

CFG16 : FSB Dynamic ODT
HIGH = Ensable (Default)
LOW = Disable

11 MCH_CFG_10 — R1508 2.21KOhm @ 1%

CFG10 : PCIe Loopback
HIGH = Disable (Default)
LOW = Enable

11 MCH_CFG_12 — R1513 2.21KOhm @ 1%

11 MCH_CFG_13 — R1510 2.21KOhm @ 1%

CFG [13:12] : XOR/ALL-Z
00 = Reserved
01= XOR Mode Enabled
10= All-Z Mode Enabled
11= Normal Operation (Default)

+3VS — R1503 4.02KOhm @ 1% — 11 MCH_CFG_19

CFG19 : DMI Lane Reversal
LOW = NORMAL (default)
HIGH = Reverse Lanes

+3VS — R1506 4.02KOhm @ 1% — 11 MCH_CFG_20

CFG20 : SDVO/PCIE CONCURRENT MODE
LOW = ONLY SDVO or PCIE is Operational (Default)
HIGH = SDVO and PCIE are operating simultaneously via the PEG port

WWW.AliSaler.Com

ASUS	Title : Cantiga-GND	
	Engineer: *Tina Lee*	
Size: Custom	Project Name: Rocky 40/50	Rev: 1.0
Date: Thursday, December 20, 2007	Sheet 15 of 94	

Title : ***			
Engineer: Tina Lee			
Size A4	Project Name Rocky 40/50		Rev 1.0
Date: Monday, December 17, 2007	Sheet 16 of 94		

WWW.AliSaler.Com

Title : ***			
Engineer: Tina Lee			
Size A4	Project Name Rocky 40/50		Rev 1.0
Date: Monday, December 17, 2007	Sheet 17 of 94		

WWW.AliSaler.Com

Title : ***			
Engineer: Tina Lee			
Size A4	Project Name Rocky 40/50		Rev 1.0
Date: Monday, December 17, 2007	Sheet 18 of 94		

WWW.AliSaler.Com

Title : ***			
Engineer: Tina Lee			
Size A4	Project Name Rocky 40/50		Rev 1.0
Date: Monday, December 17, 2007	Sheet 19 of 94		

WWW.AliSaler.Com

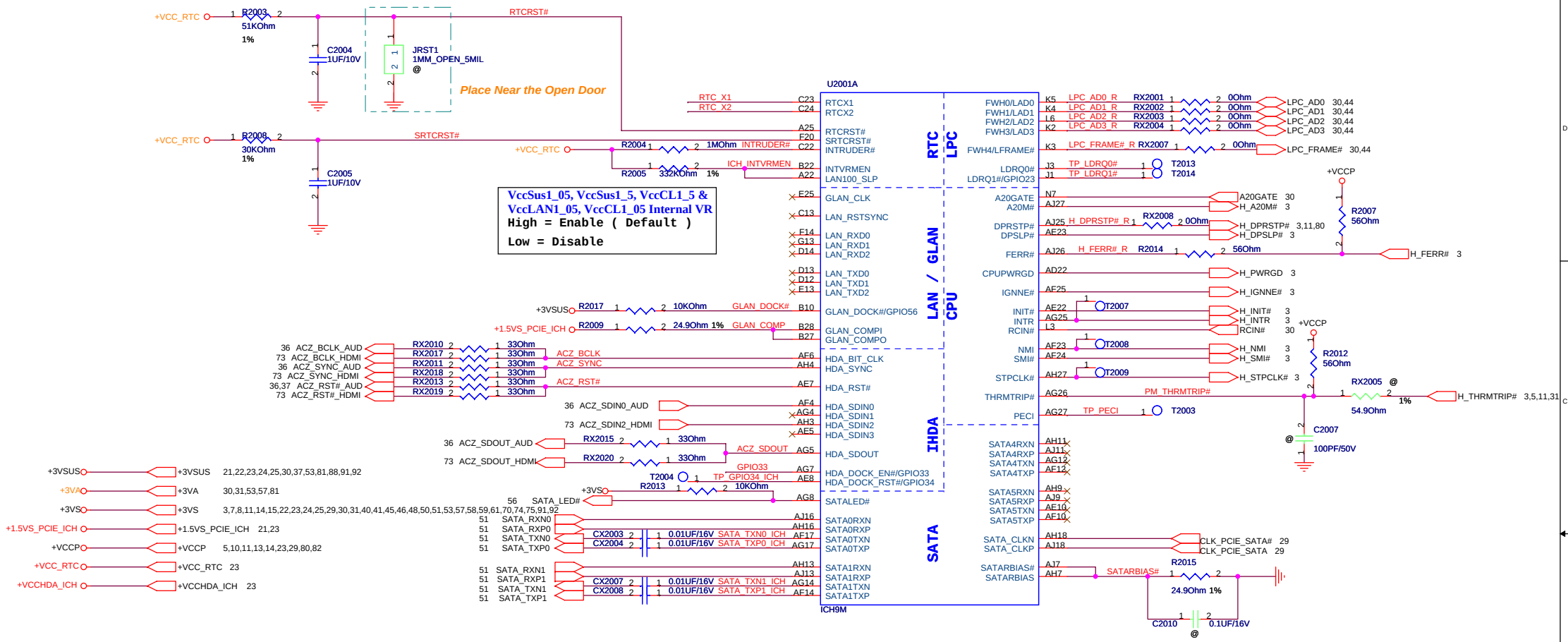

Title : SB-ICH9M(1)

Engineer: Tina Lee

Size	Project Name	Rev
Custom	Rocky 40/50	1.0

Date: Thursday, December 20, 2007 Sheet 20 of 94

WWW.AliSaler.Com

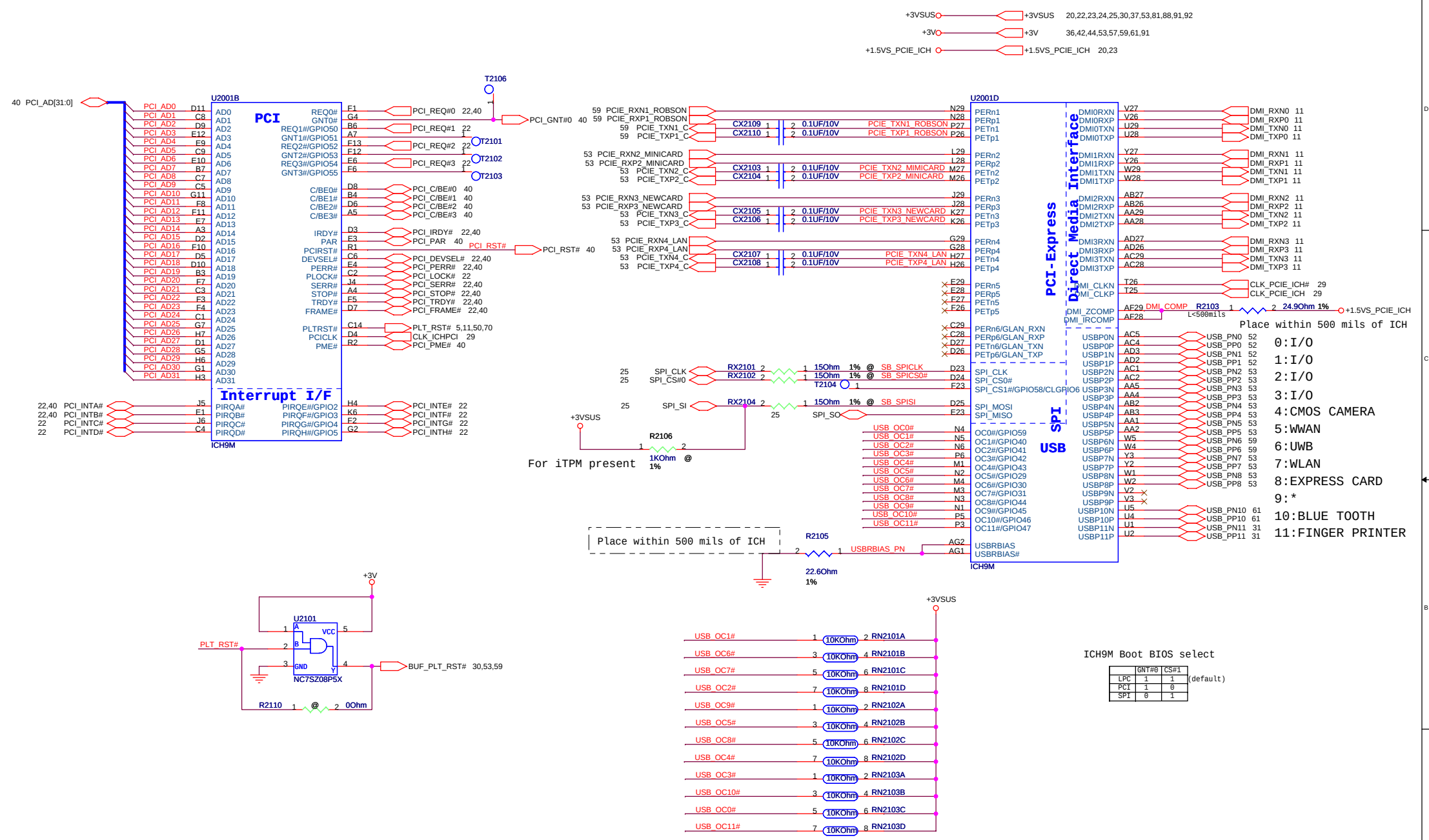

Title : SB-ICH9M(2)		
Engineer: Tina Lee		
Size: Custom	Project Name: Rocky 40/50	Rev: 1.0
Date: Thursday, December 20, 2007	Sheet 21 of 94	

WWW.AliSaler.Com

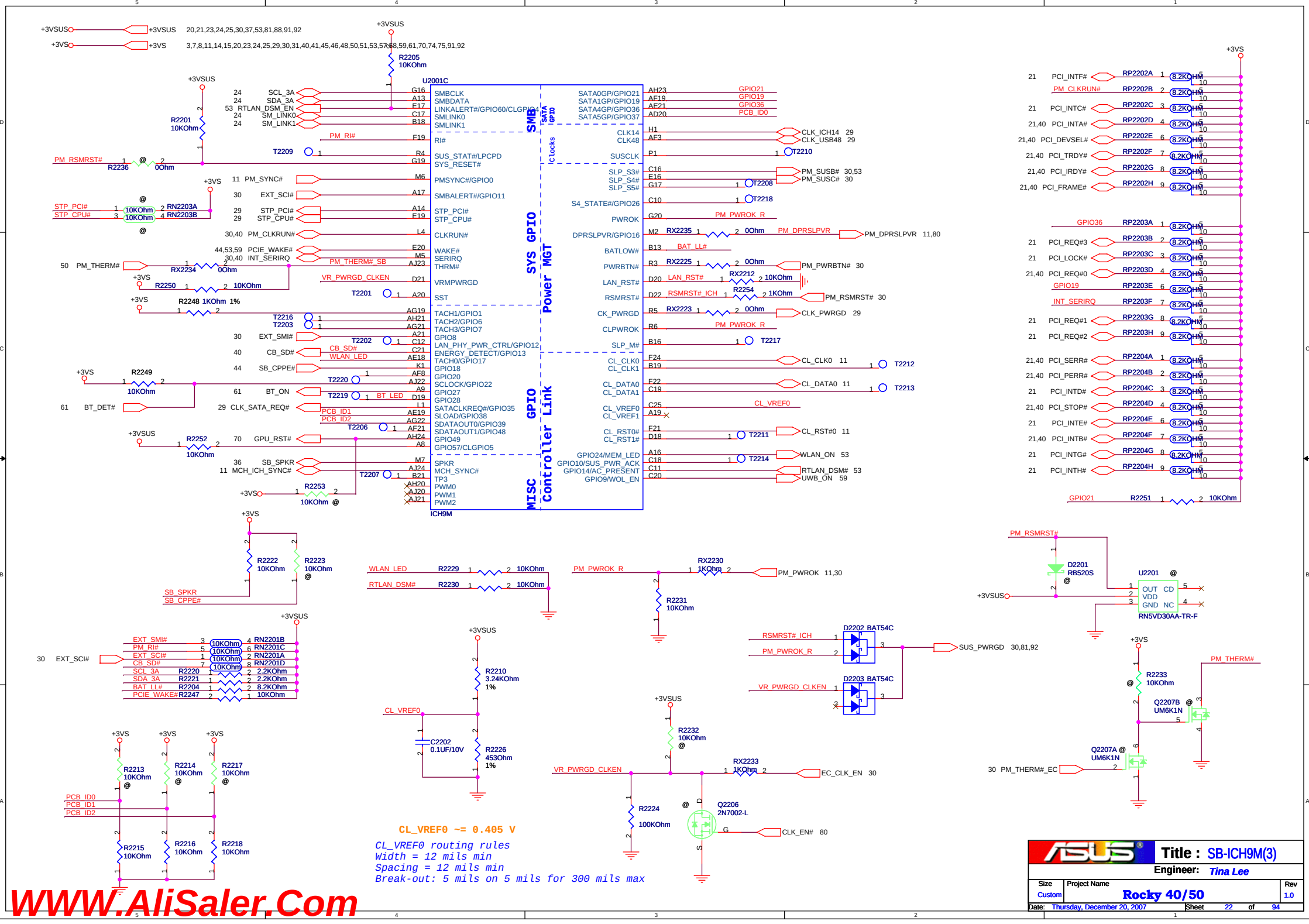
U2001C
ICH9M
SMB
SATA GPIO
Clocks
SYS GPIO
Power MGT
GPIO
Controller Link
MISC
SMBCLK
SMBDATA
LINKALERT#/GPIO60/CLGPIO4
SMLINK0
SMLINK1
RI#
SUS_STAT#/LPCPD
SYS_RESET#
PMSYNC#/GPIO0
SMBALERT#/GPIO11
STP_PCI#
STP_CPU#
CLKRUN#
WAKE#
SERIRQ
THRM#
VRMPWRGD
SST
TACH1/GPIO1
TACH2/GPIO6
TACH3/GPIO7
GPIO8
LAN_PHY_PWR_CTRL/GPIO12
ENERGY_DETECT/GPIO13
TACH0/GPIO17
GPIO18
GPIO20
SCLOCK/GPIO22
GPIO27
GPIO28
SATACLKREQ#/GPIO35
SLOAD/GPIO38
SDATAOUT0/GPIO39
SDATAOUT1/GPIO48
GPIO49
GPIO57/CLGPIO5
SPKR
MCH_SYNC#
TP3
PWM0
PWM1
PWM2
SATA0GP/GPIO21
SATA1GP/GPIO19
SATA4GP/GPIO36
SATA5GP/GPIO37
CLK14
CLK48
SUSCLK
SLP_S3#
SLP_S4#
SLP_S5#
S4_STATE#/GPIO26
PWROK
DPRSLPVR/GPIO16
BATLOW#
PWRBTN#
LAN_RST#
RSMRST#
CK_PWRGD
CLPWROK
SLP_M#
CL_CLK0
CL_CLK1
CL_DATA0
CL_DATA1
CL_VREF0
CL_VREF1
CL_RST0#
CL_RST1#
GPIO24/MEM_LED
GPIO10/SUS_PWR_ACK
GPIO14/AC_PRESENT
GPIO9/WOL_EN
+3VSUS 20,21,23,24,25,30,37,53,81,88,91,92
+3VS 3,7,8,11,14,15,20,23,24,25,29,30,31,40,41,45,46,48,50,51,53,57,58,59,61,70,74,75,91,92
R2205 10KOhm
R2201 10KOhm
R2236 0Ohm
RN2203A
RN2203B
R2234 0Ohm
R2250 10KOhm
R2248 1KOhm 1%
R2249 10KOhm
R2252 10KOhm
R2253 10KOhm
R2222 10KOhm
R2223 10KOhm
RX2235 0Ohm
RX2225 0Ohm
RX2212 10KOhm
R2254 1KOhm
RX2223 0Ohm
RX2230 1KOhm
R2229 10KOhm
R2230 10KOhm
R2231 10KOhm
RN2201B 10KOhm
RN2201C 10KOhm
RN2201A 10KOhm
RN2201D 10KOhm
R2220 2.2KOhm
R2221 2.2KOhm
R2204 8.2KOhm
R2247 10KOhm
R2210 3.24KOhm 1%
R2226 453Ohm 1%
C2202 0.1UF/10V
R2213 10KOhm
R2214 10KOhm
R2217 10KOhm
R2215 10KOhm
R2216 10KOhm
R2218 10KOhm
R2232 10KOhm
RX2233 1KOhm
R2224 100KOhm
Q2206 2N7002-L
D2202 BAT54C
D2203 BAT54C
D2201 RB520S
U2201
RN5VD30AA-TR-F
R2233 10KOhm
Q2207B UM6K1N
Q2207A UM6K1N
RP2202A 8.2KOHM
RP2202B 8.2KOHM
RP2202C 8.2KOHM
RP2202D 8.2KOHM
RP2202E 8.2KOHM
RP2202F 8.2KOHM
RP2202G 8.2KOHM
RP2202H 8.2KOHM
RP2203A 8.2KOHM
RP2203B 8.2KOHM
RP2203C 8.2KOHM
RP2203D 8.2KOHM
RP2203E 8.2KOHM
RP2203F 8.2KOHM
RP2203G 8.2KOHM
RP2203H 8.2KOHM
RP2204A 8.2KOHM
RP2204B 8.2KOHM
RP2204C 8.2KOHM
RP2204D 8.2KOHM
RP2204E 8.2KOHM
RP2204F 8.2KOHM
RP2204G 8.2KOHM
RP2204H 8.2KOHM
R2251 10KOhm
CL_VREF0 ~= 0.405 V
CL_VREF0 routing rules
Width = 12 mils min
Spacing = 12 mils min
Break-out: 5 mils on 5 mils for 300 mils max
Title : SB-ICH9M(3)
Engineer: Tina Lee
Size Custom
Project Name Rocky 40/50
Rev 1.0
Date: Thursday, December 20, 2007
Sheet 22 of 94
WWW.AliSaler.Com

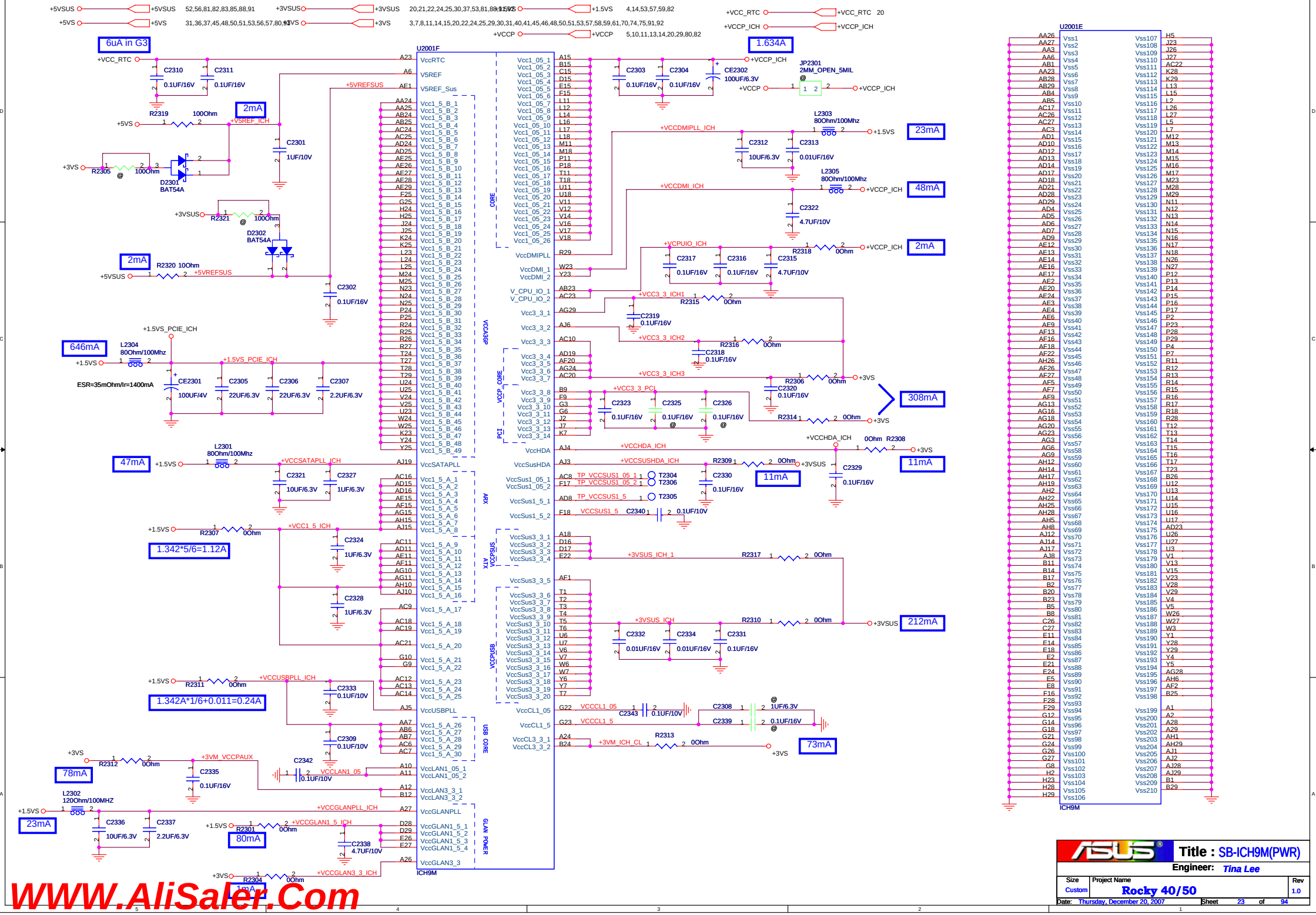

WWW.AliSaler.Com

ICH9-M

+12VSUS	+12VSUS	52,81,91
+12VS	+12VS	45,91
+3VA	+3VA	20,30,31,53,57,81
+3VSUS	+3VSUS	20,21,22,23,25,30,37,53,81,88,91,92
+3VS	+3VS	3,7,8,11,14,15,20,22,23,25,29,30,31,40,41,45,46,48,50,51,53,57,58,59,61,70,74,75,91,92

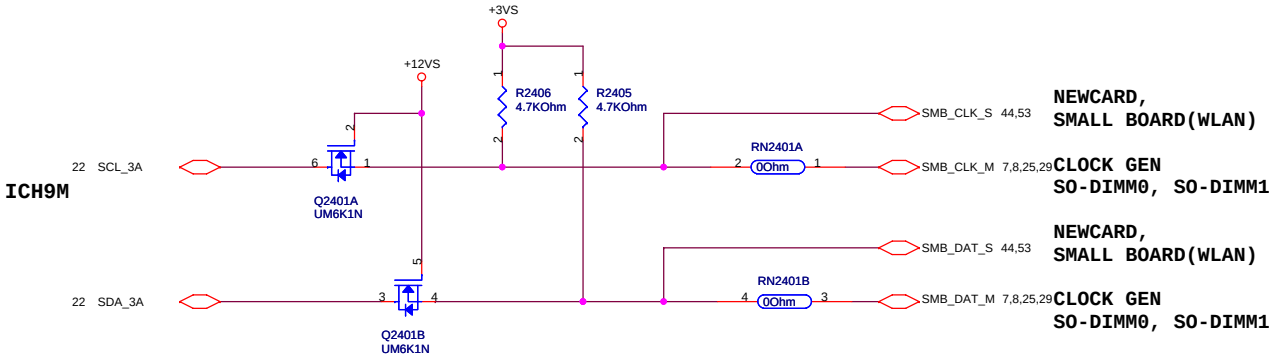

NEWCARD,
SMALL BOARD(WLAN)

CLOCK GEN
SO-DIMM0, SO-DIMM1

NEWCARD,
SMALL BOARD(WLAN)

CLOCK GEN
SO-DIMM0, SO-DIMM1

EC

Don't support iAMT
Remove ME-EC SMBus.

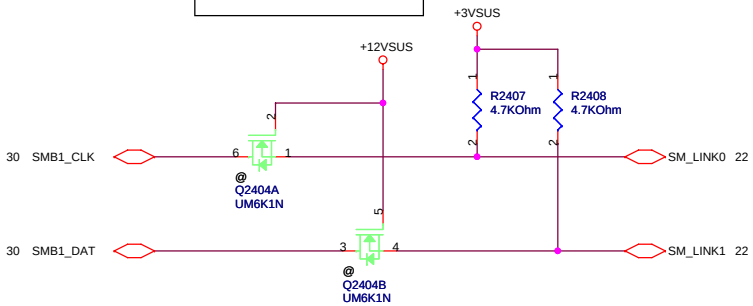

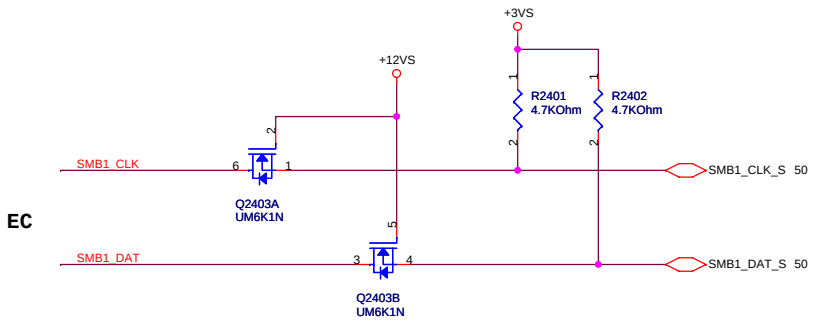

THERMAL IC
G781, G781-1

ASUS	Title : ICH9M-Other	
	Engineer: Tina Lee	
Size: Custom	Project Name: Rocky 40/50	Rev: 1.0
Date: Thursday, December 20, 2007	Sheet 24 of 94	

WWW.AliSaler.Com

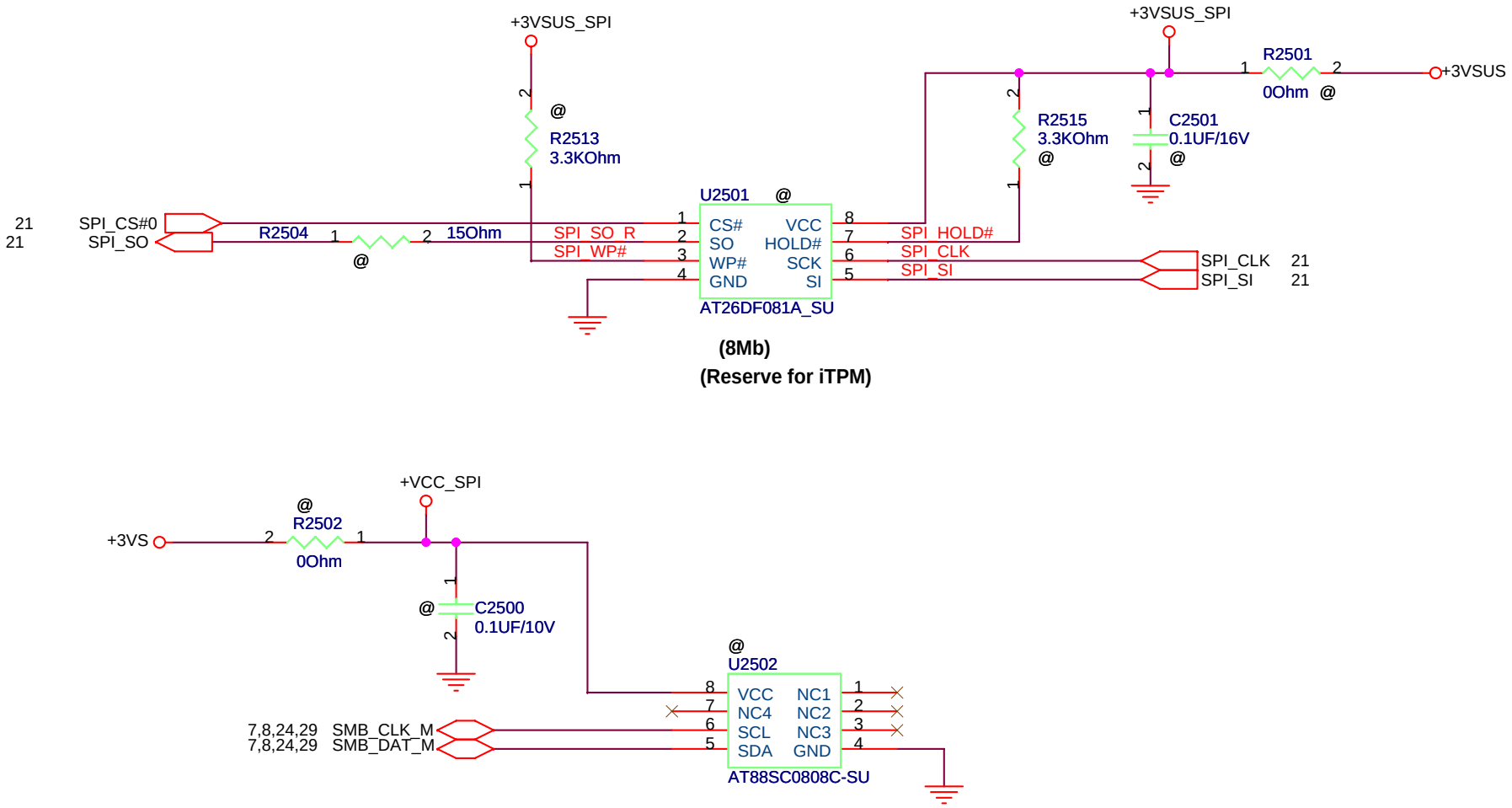

ASUS	Title : SPI ROM	
	Engineer: Tina Lee	
Size: Custom	Project Name: Rocky 40/50	Rev: 1.0
Date: Thursday, December 20, 2007	Sheet 25 of 94	

WWW.AliSaler.Com

Title :				
Engineer: Tina Lee				
Size A4	Project Name Rocky 40/50			Rev 1.0
Date: Monday, December 17, 2007		Sheet 26 of 94		

WWW.AliSaler.Com

Title :			
Engineer: Tina Lee			
Size A4	Project Name Rocky 40/50		Rev 1.0
Date: Monday, December 17, 2007		Sheet 27 of 94	

WWW.AliSaler.Com

Title :				
Engineer: Tina Lee				
Size	Project Name			Rev
A4	Rocky 40/50			1.0
Date: Monday, December 17, 2007		Sheet 28 of 94		

WWW.AliSaler.Com

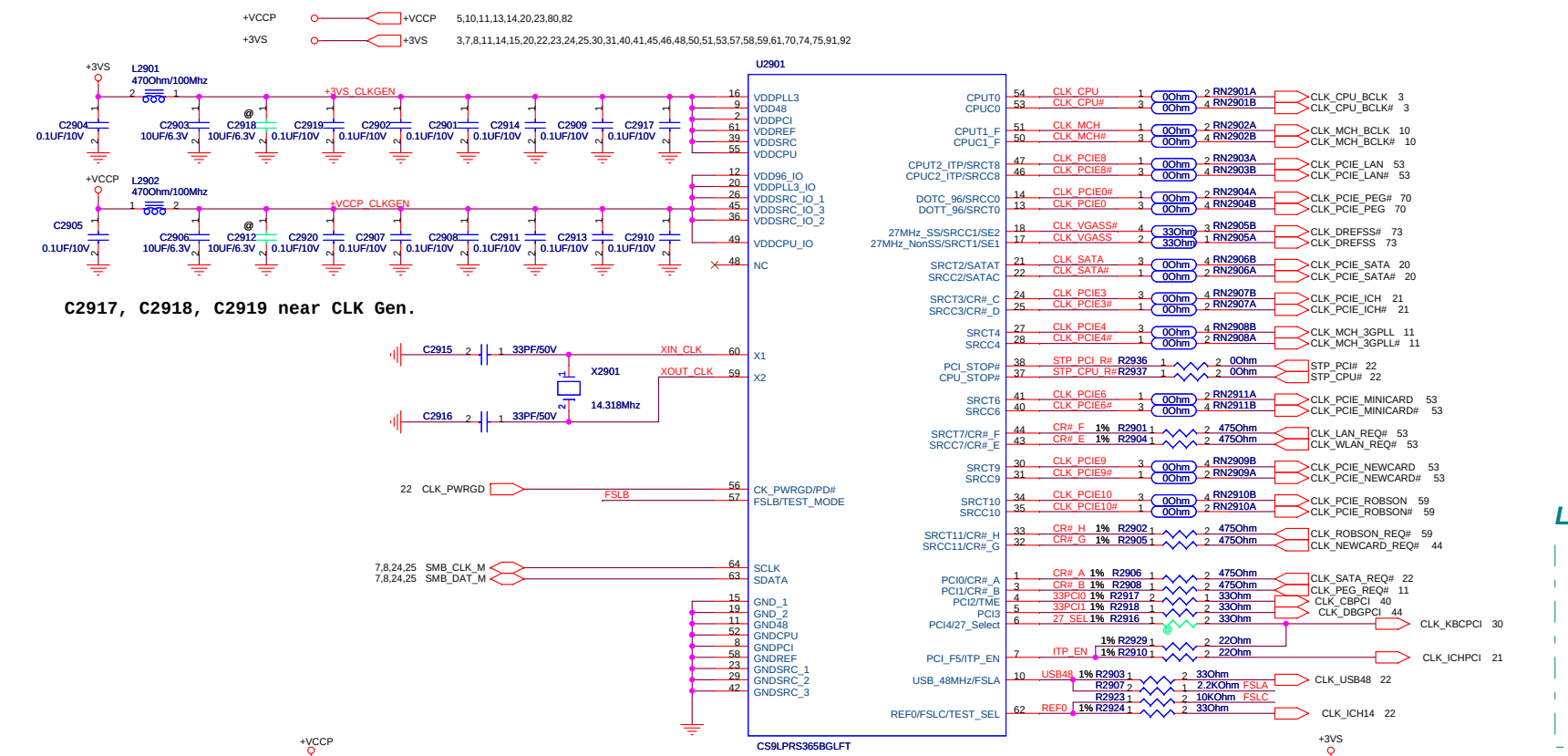

BCLK	FSB	FSLC BSEL2	FSLB BSEL1	FSLA BSEL0
166	667	0	1	1
200	800	0	1	0
266	1066	0	0	0

Title : ICS9LPR365
Engineer: Tina Lee
Size: Custom
Project Name: Rocky 40/50
Rev: 1.0
Date: Thursday, December 20, 2007
Sheet 29 of 94

WWW.AliSaler.Com

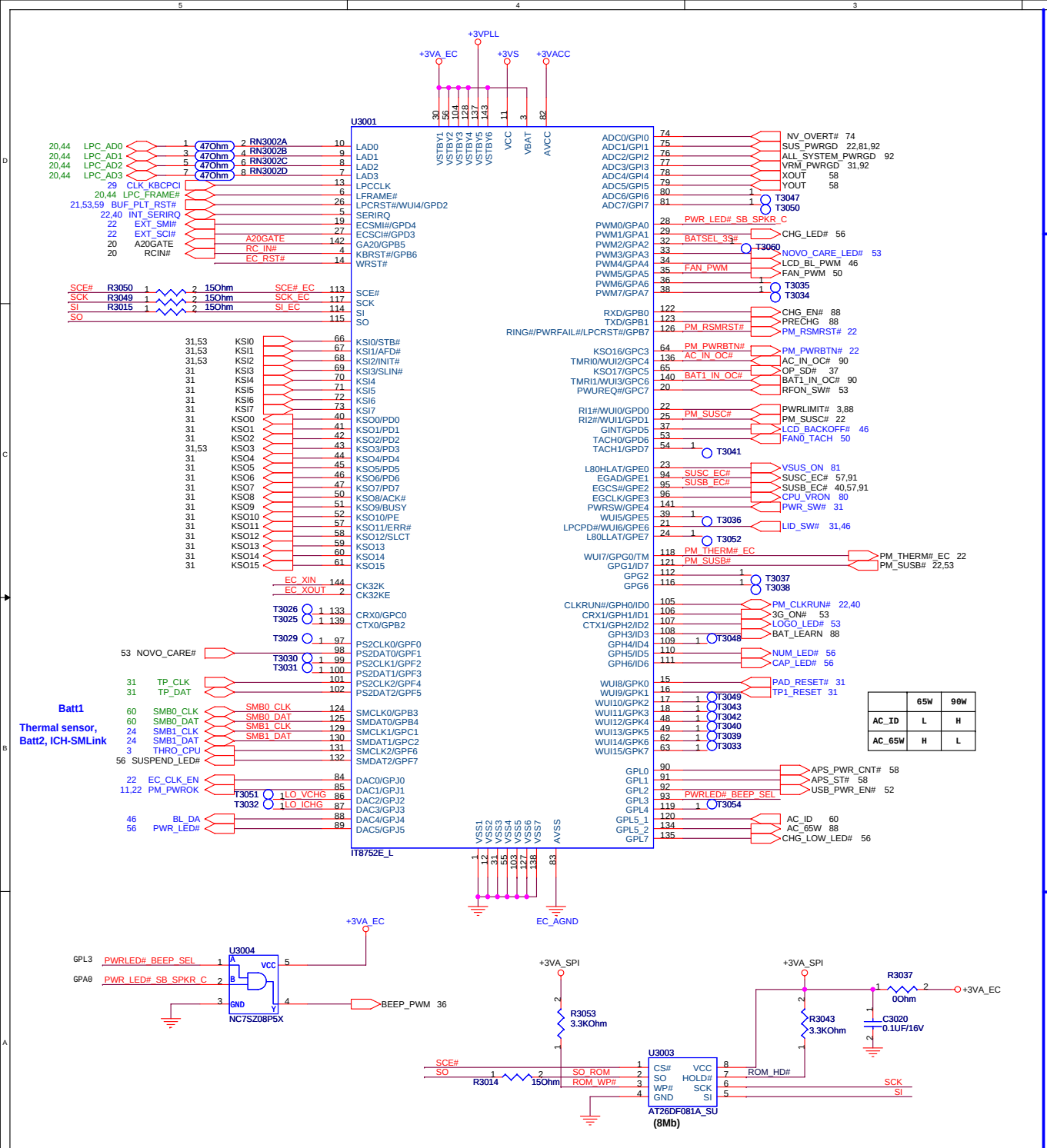

	65W	90W
AC_ID	L	H
AC_65W	H	L

For IT8752 Power

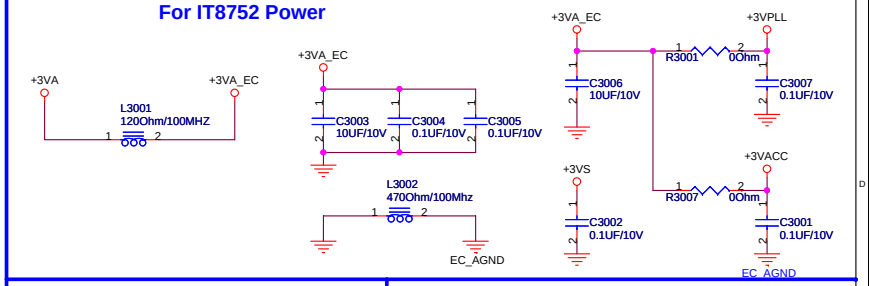

For PU / PD

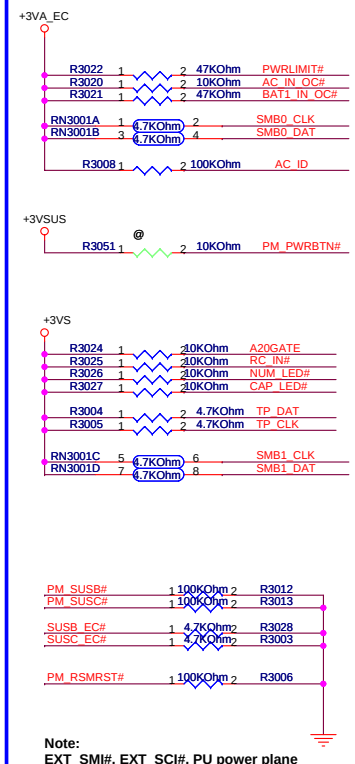

Note:
EXT_SMI#, EXT_SCI#, PU power plane depend on ICH8 GPIO.

For EC Reset

Note:
close to the WRST# (IT8752E pin19)

EC Reset Ckts:
Option 1:
Mount U3002,C3009,C3011
DNI: D3001,C3010,R3034,R3023
Option 2:
Mount D3001,C3010,R3034,R3023
DNI: U3002, C3009, C3011

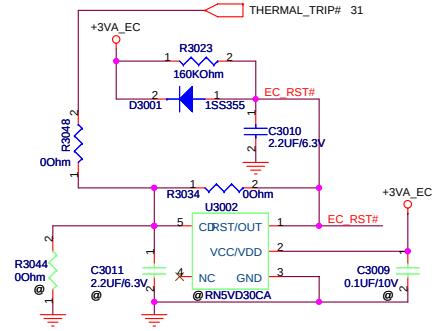

R3044 close to RAM door.

For Instant Key

Note: Close to EC

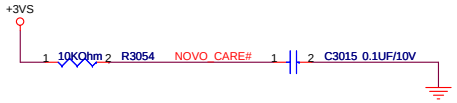

For X'tal

Note:
Cload=12.5PF
place close to EC

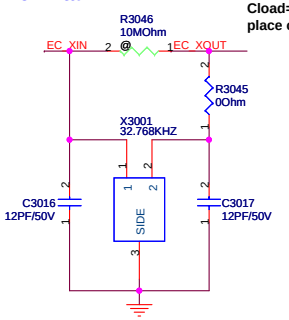

For EC Hardware Strap

I/O Base Address

Note: It can be programmable by EC fireware

Share Memory

Note: It can be programmable by EC fireware.

PP Enable

Note: Default Int. Pull-Low

Title : EC_IT8752 (1/2)			
Engineer: Tina Lee			
Size: Custom	Project Name: Rocky 40/50		Rev: 1.0
Date: Thursday, December 20, 2007	Sheet 30 of 94		

WWW.AliSaler.Com

TOUCH PAD CONN

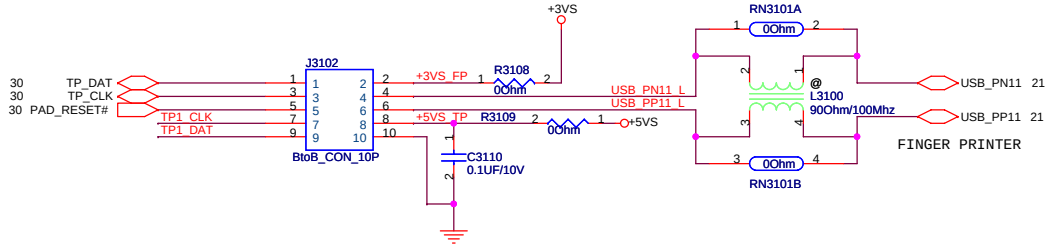

TP : Touch Pad
TP1: Track Point

TRACK POINT CONN

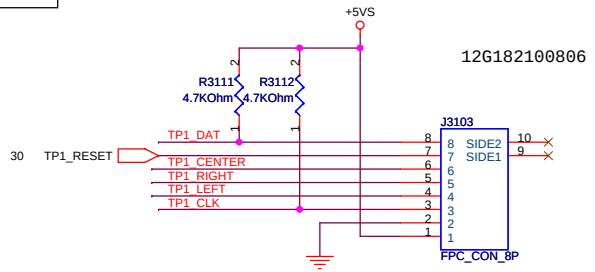

For Switch

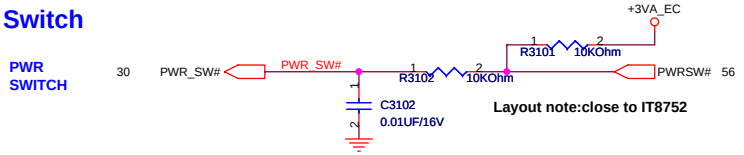

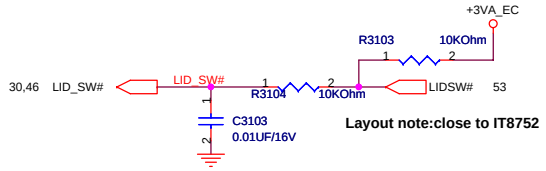

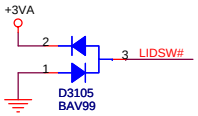

close to connector

Note:
LID_SW# is easy to cause high voltage damage when plugging inverter board connector to M/B with AC present.
Need to add bidirectional diode to protect this pin.

Keyboard Connector

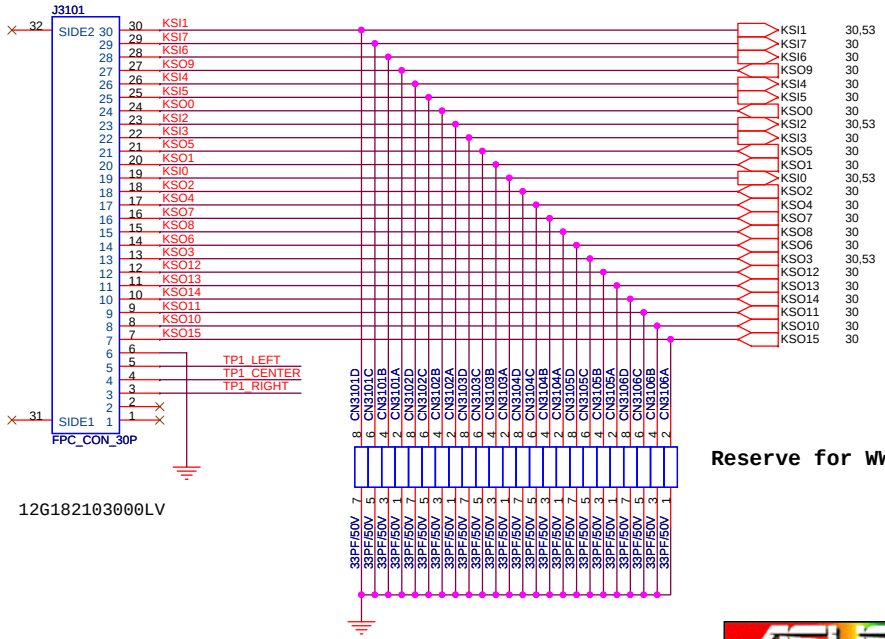

12G182103000LV

Reserve for WWAN

For Thermal Control Method

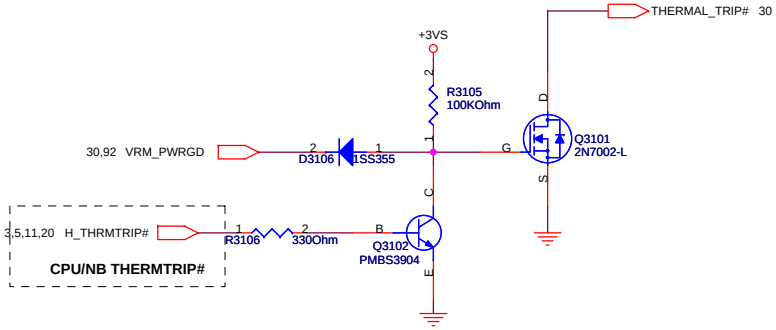

ASUS	Title : EC_IT8752 (2/2)	
	Engineer: Tina Lee	
Size: Custom	Project Name: Rocky 40/50	Rev: 1.0
Date: Thursday, December 20, 2007	Sheet 31 of 94	

WWW.AliSaler.Com

ASUS	Title : POWER-ON SEQUENCE		
	Engineer: *Tina Lee*		
Size A4	Project Name **Rocky 40/50**		Rev 1.0
Date: Monday, December 17, 2007		Sheet 32 of 94	

WWW.AliSaler.Com

Title :*****			
Engineer: *Tina Lee*			
Size A4	Project Name **Rocky 40/50**		Rev 1.0
Date: Monday, December 17, 2007	Sheet 33 of 94		

WWW.AliSaler.Com

ASUS	Title : ****		
	Engineer: *Tina Lee*		
Size A4	Project Name **Rocky 40/50**		Rev 1.0
Date: Monday, December 17, 2007		Sheet 34 of 94	

WWW.AliSaler.Com

ASUS	Title : MDC		
	Engineer: *Tina Lee*		
Size A4	Project Name **Rocky 40/50**		Rev 1.0
Date: Monday, December 17, 2007		Sheet 35 of 94	

WWW.AliSaler.Com

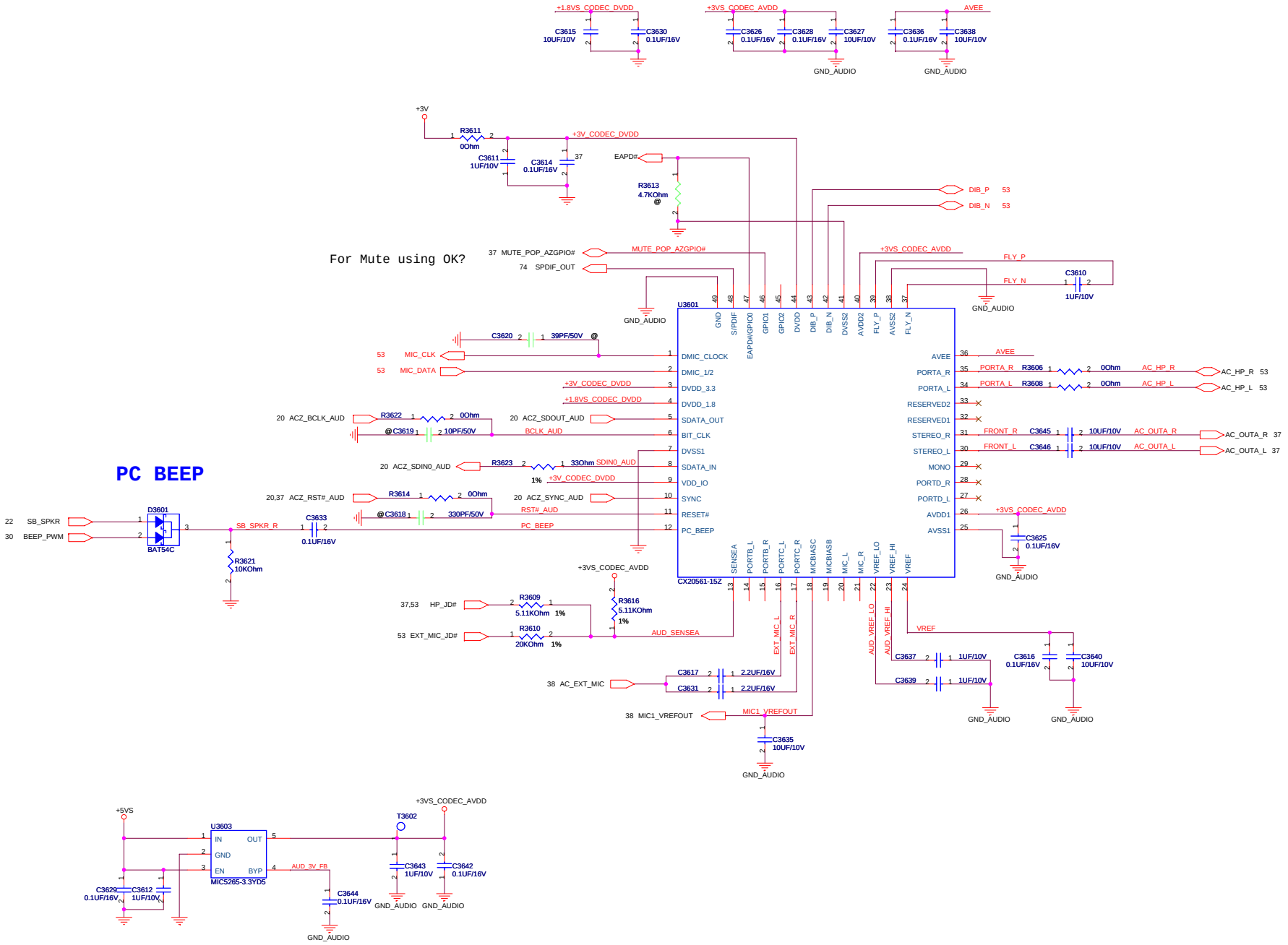

Size	Project Name	Rev
Custom	Rocky 40/50	1.0

Title : CODEC CX20561

Engineer: Tina Lee

Date: Thursday, December 20, 2007 Sheet 36 of 94

WWW.AliSaler.Com

DePOP Circuit

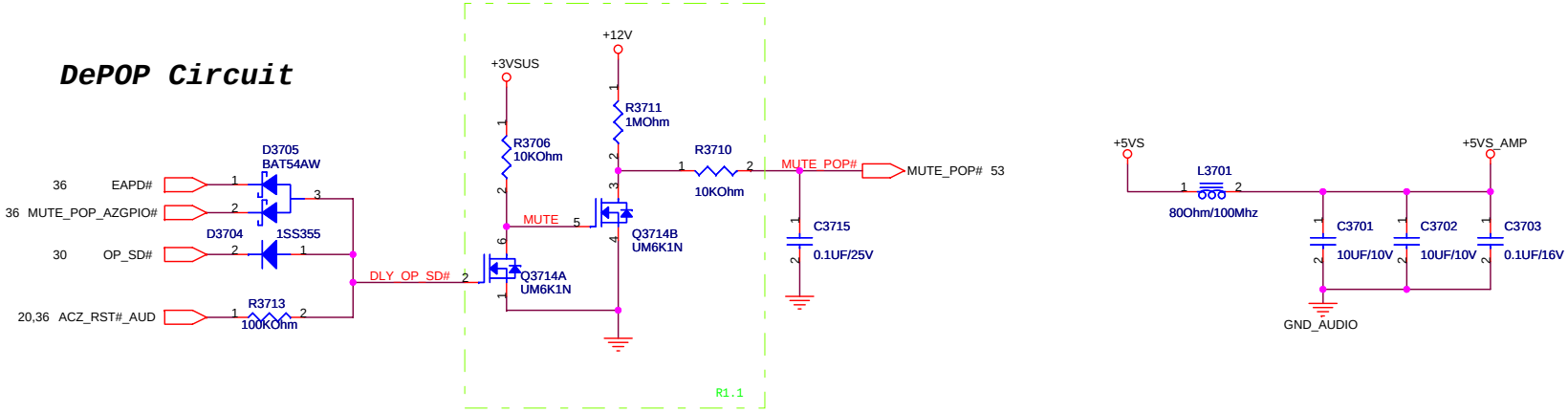

JACK GND

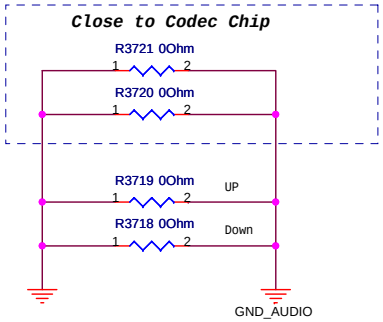

SPEAKER AMP

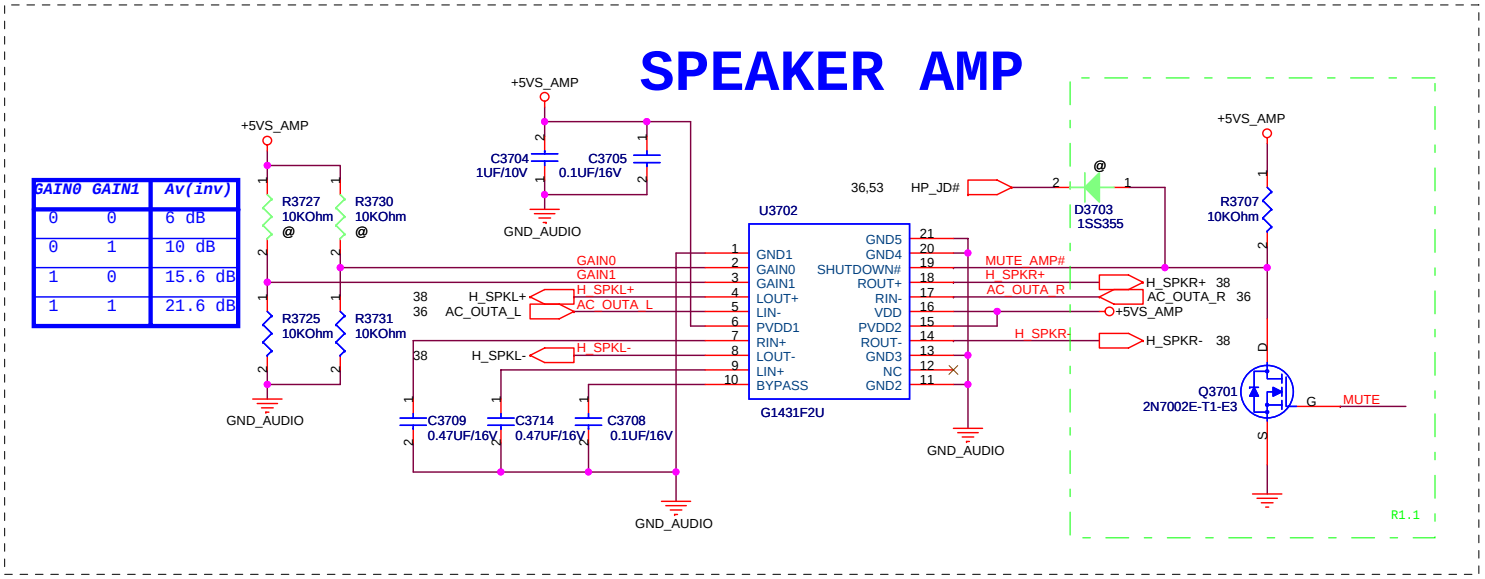

GAIN0	GAIN1	Av(inv)
0	0	6 dB
0	1	10 dB
1	0	15.6 dB
1	1	21.6 dB

Title :	AUDIO AMP
Engineer:	Tina Lee
Size	Custom
Project Name	Rocky 40/50
Rev	1.0
Date:	Thursday, December 20, 2007
Sheet	37 of 94

WWW.AliSaler.Com

EXT MICROPHONE

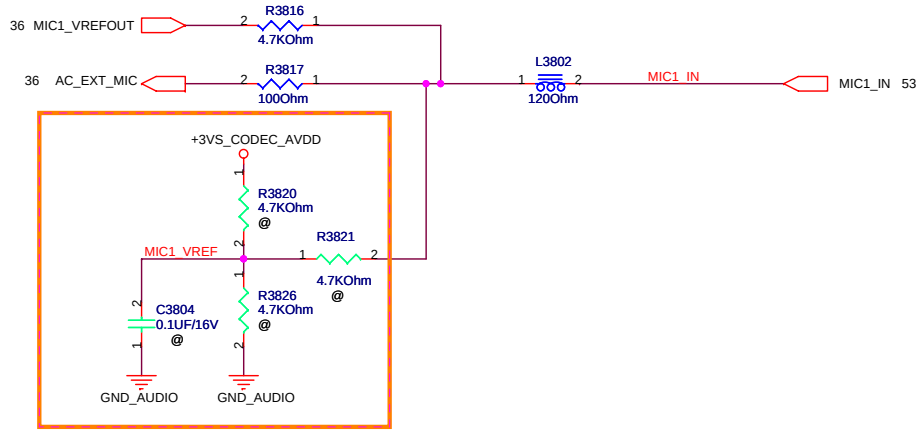

Reserved the external MIC bias(T filter).

SPEAKER CONNECTOR

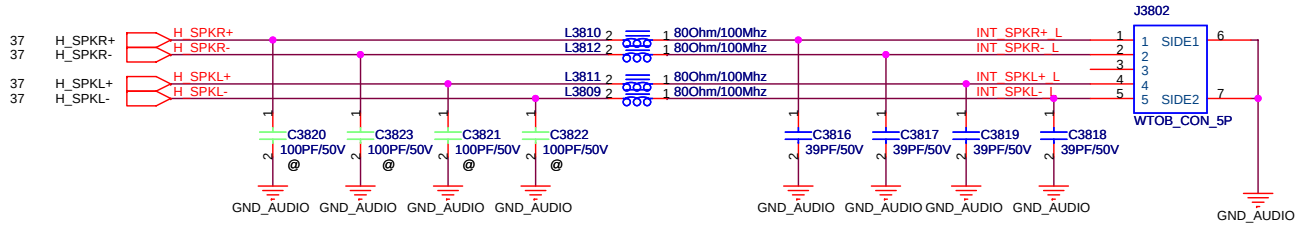

12G171010050LV
ACES/87213-0500G

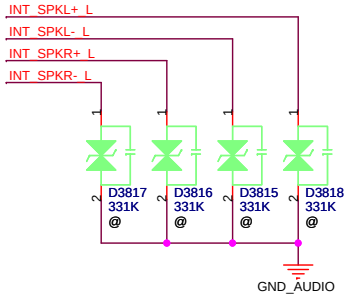

ASUS	Title : MIC&LINEIN	
	Engineer: Tina Lee	
Size: Custom	Project Name: Rocky 40/50	Rev: 1.0
Date: Thursday, December 20, 2007	Sheet 38 of 94	

WWW.AliSaler.Com

ASUS	Title : FM2010 DSP		
	Engineer: *Tina Lee*		
Size A4	Project Name **Rocky 40/50**		Rev 1.0
Date: Monday, December 17, 2007		Sheet 39 of 94	

WWW.AliSaler.Com

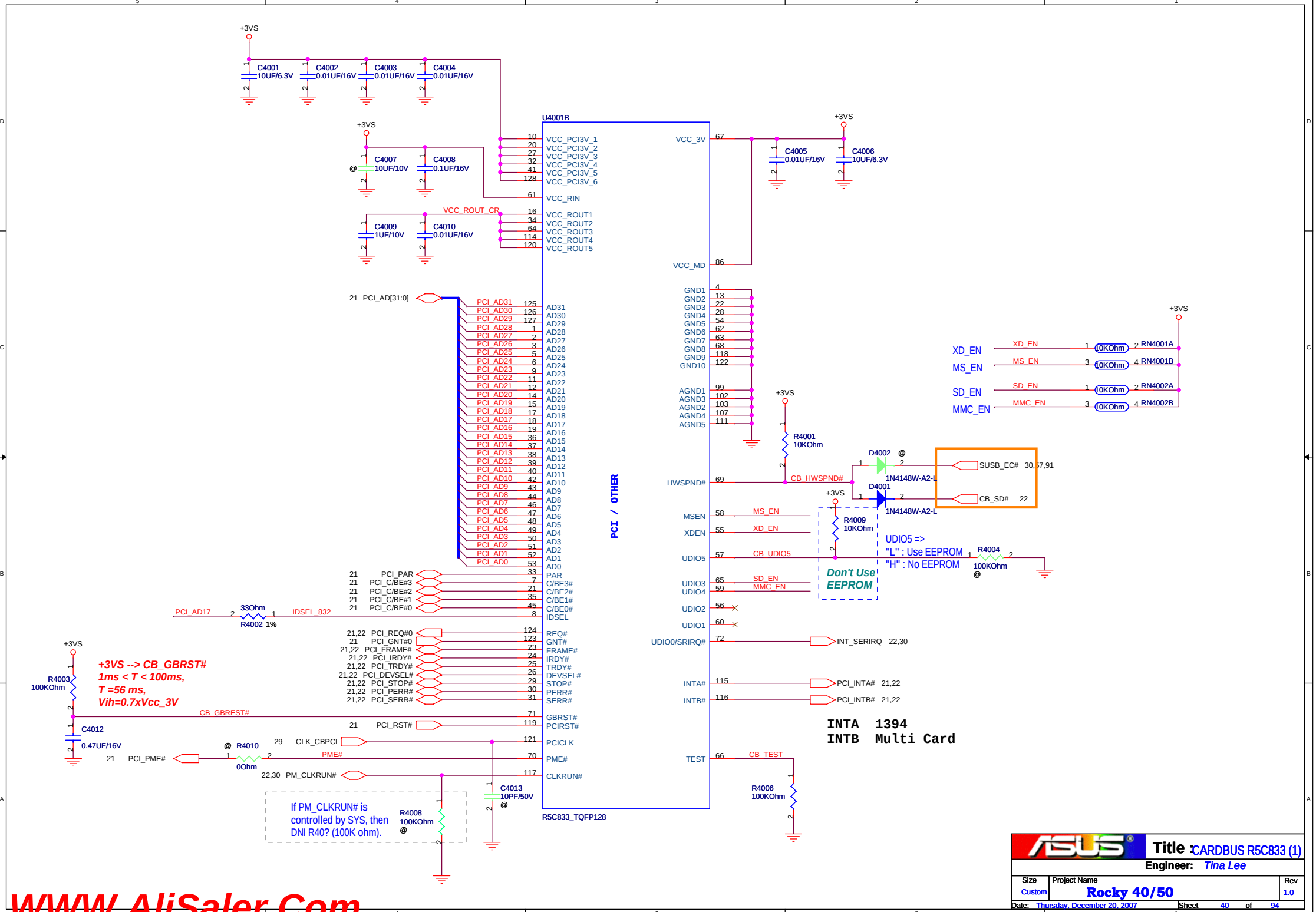

WWW.AliSaler.Com

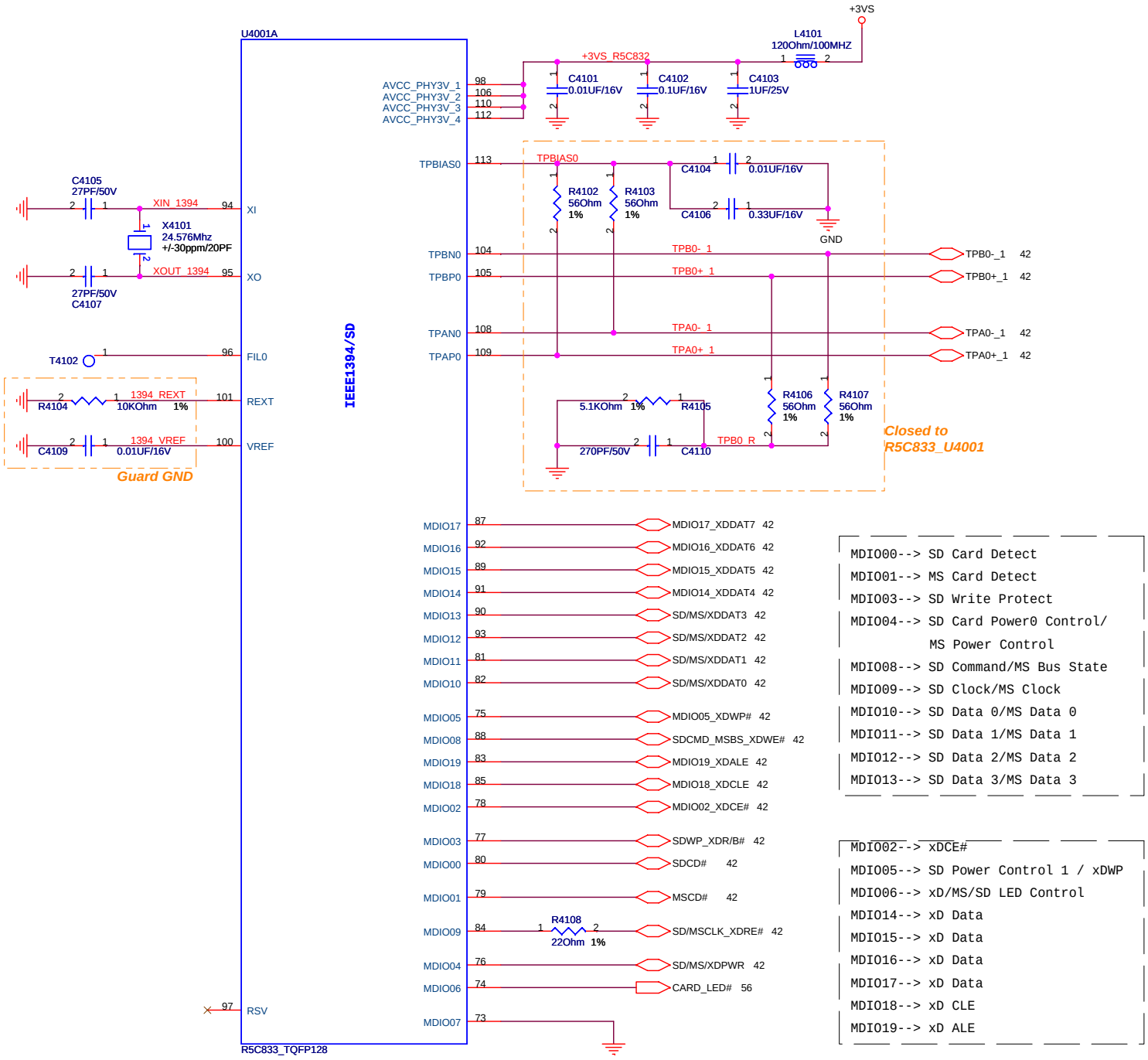

MDIO00--> SD Card Detect
MDIO01--> MS Card Detect
MDIO03--> SD Write Protect
MDIO04--> SD Card Power0 Control/
MS Power Control
MDIO08--> SD Command/MS Bus State
MDIO09--> SD Clock/MS Clock
MDIO10--> SD Data 0/MS Data 0
MDIO11--> SD Data 1/MS Data 1
MDIO12--> SD Data 2/MS Data 2
MDIO13--> SD Data 3/MS Data 3

MDIO02--> xDCE#
MDIO05--> SD Power Control 1 / xDWP
MDIO06--> xD/MS/SD LED Control
MDIO14--> xD Data
MDIO15--> xD Data
MDIO16--> xD Data
MDIO17--> xD Data
MDIO18--> xD CLE
MDIO19--> xD ALE

Title : CARDBUS R5C833 (2)		
Engineer: Tina Lee		
Size: Custom	Project Name: Rocky 40/50	Rev: 1.0
Date: Thursday, December 20, 2007	Sheet 41 of 94	

WWW.AliSaler.Com

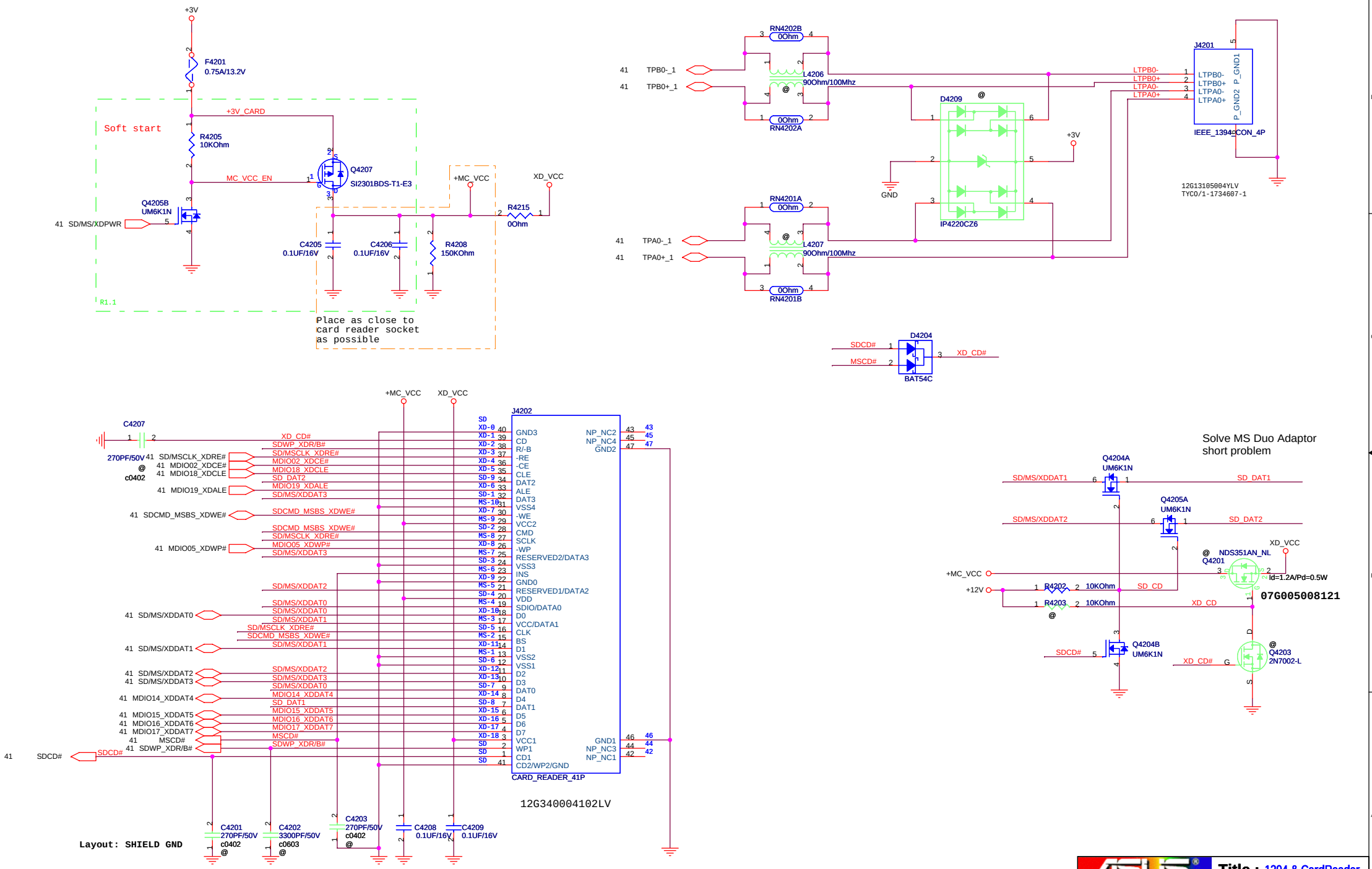

ASUS	Title : 1394 & CardReader	
	Engineer: Tina Lee	
Size: Custom	Project Name: Rocky 40/50	Rev: 1.0
Date: Thursday, December 20, 2007	Sheet 42 of 94	

WWW.AliSaler.Com

ASUS	Title : NEW CARD		
	Engineer: Tina Lee		
Size A4	Project Name Rocky 40/50		Rev 1.0
Date: Monday, December 17, 2007		Sheet 43 of 94	

WWW.AliSaler.Com

Block A

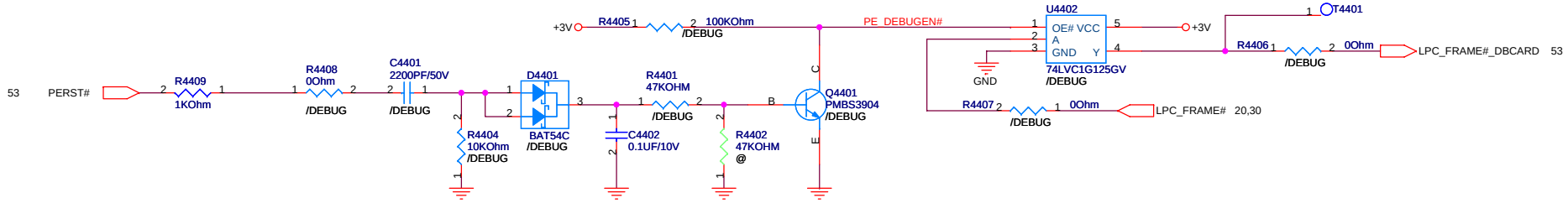

Block C

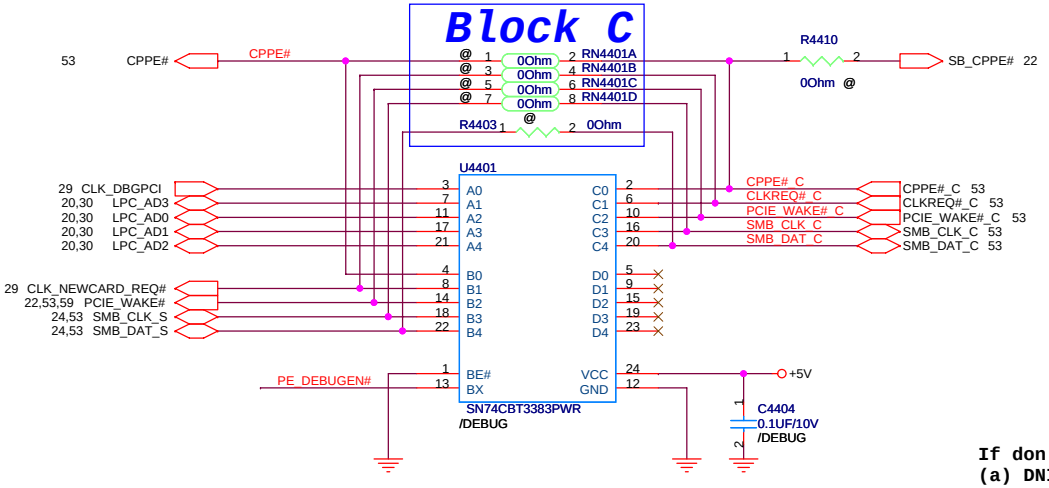

If don't support NewCard Debug Card,Pls do
(a) DNI all components of block A
(b) Mount Block C (RN5401,R6975)

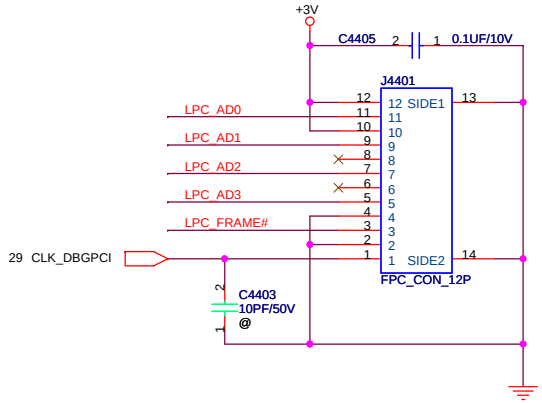

ASUS	Title : DEBUG	
	Engineer: Tina Lee	
Size: Custom	Project Name: Rocky 40/50	Rev: 1.0
Date: Thursday, December 20, 2007	Sheet 44 of 94	

WWW.AliSaler.Com

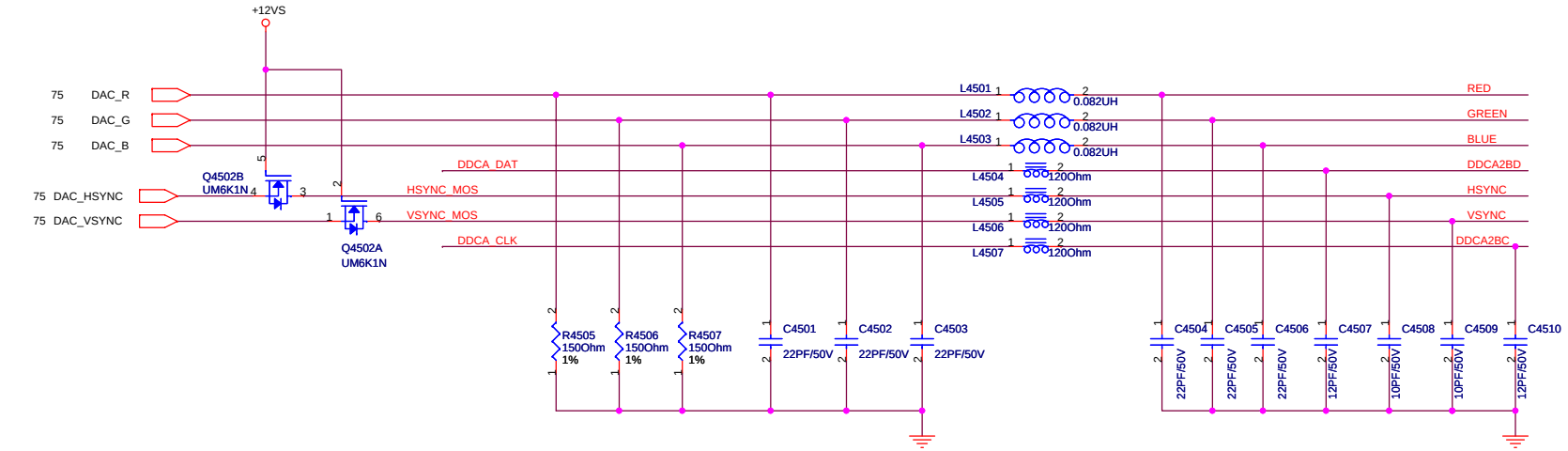

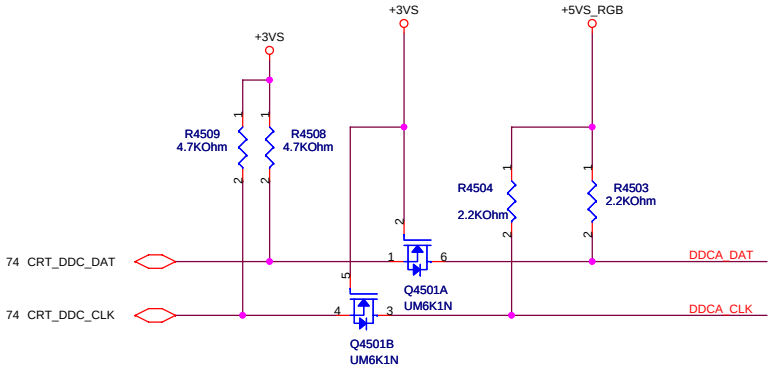

PLACE ESD Diodes near VGA port

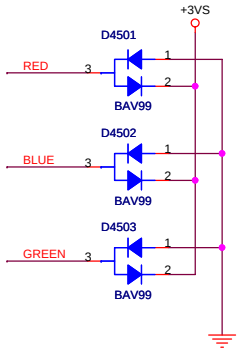

D_SUB_15P

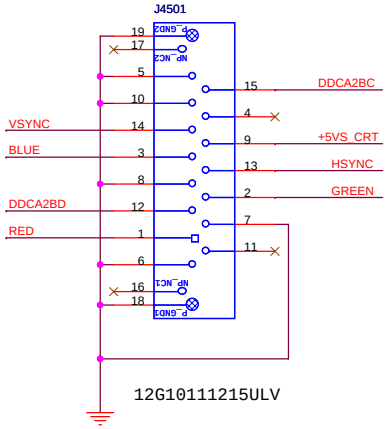

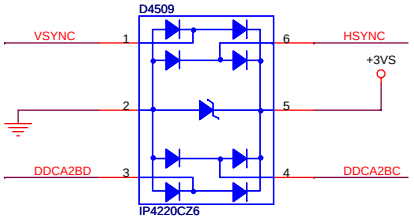

ASUS	Title : CRT	
	Engineer: Tina Lee	
Size: Custom	Project Name: Rocky 40/50	Rev: 1.0
Date: Thursday, December 20, 2007	Sheet 45 of 94	

WWW.AliSaler.Com

LVDS CNT

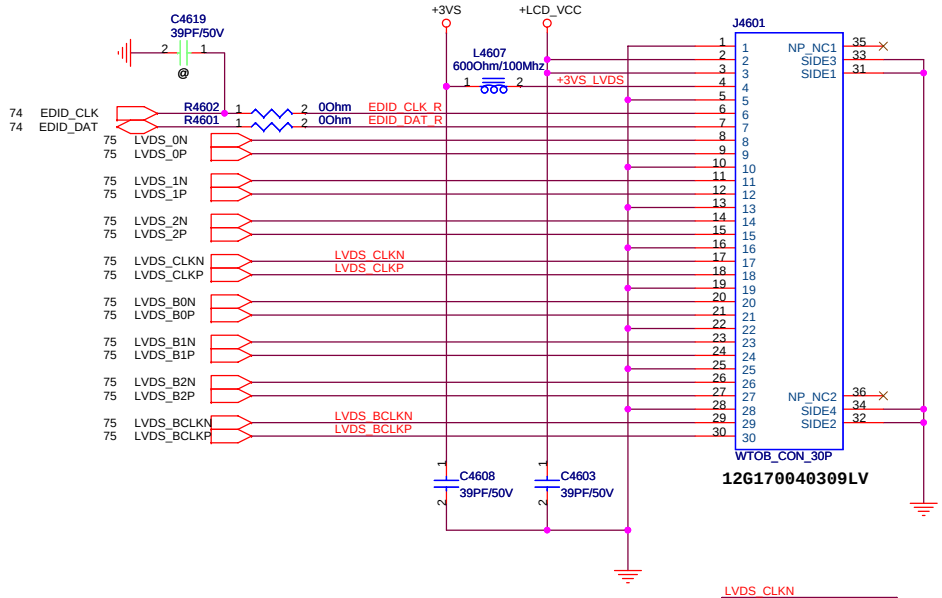

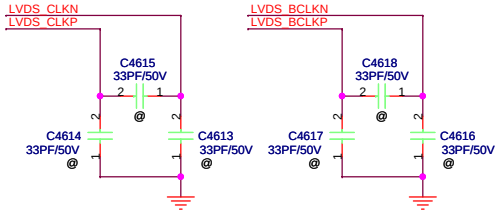

INVERTER CNT

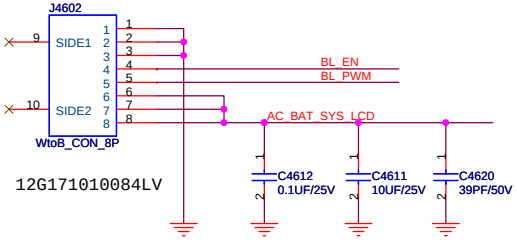

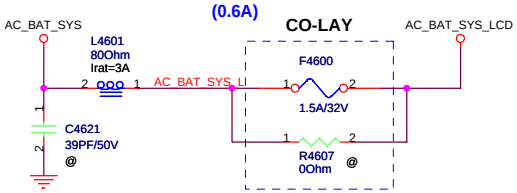

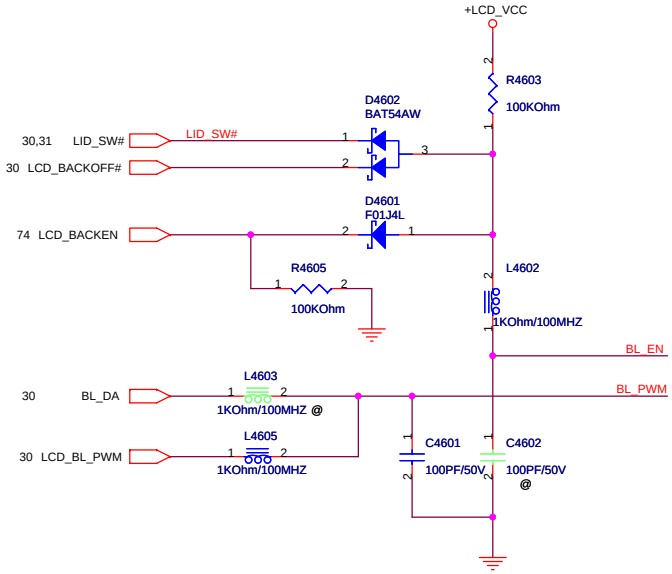

Power Switch for LCD Power

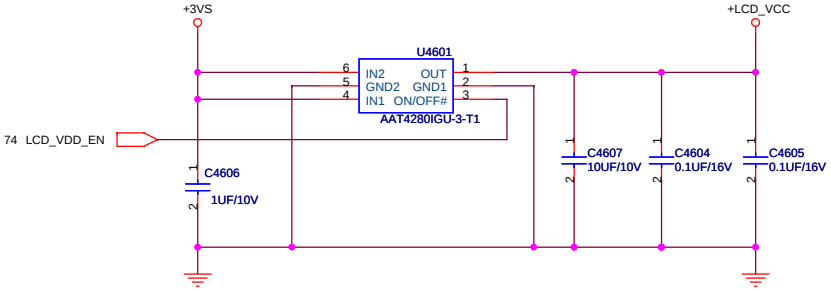

ASUS	Title : LVDS & Inverter CON	
	Engineer: Tina Lee	
Size: Custom	Project Name: Rocky 40/50	Rev: 1.0
Date: Thursday, December 20, 2007	Sheet 46 of 94	

WWW.AliSaler.Com

ASUS	Title : TV_OUT CON		
	Engineer: *Tina Lee*		
Size A4	Project Name **Rocky 40/50**		Rev 1.0
Date: Monday, December 17, 2007		Sheet 47 of 94	

WWW.AliSaler.Com

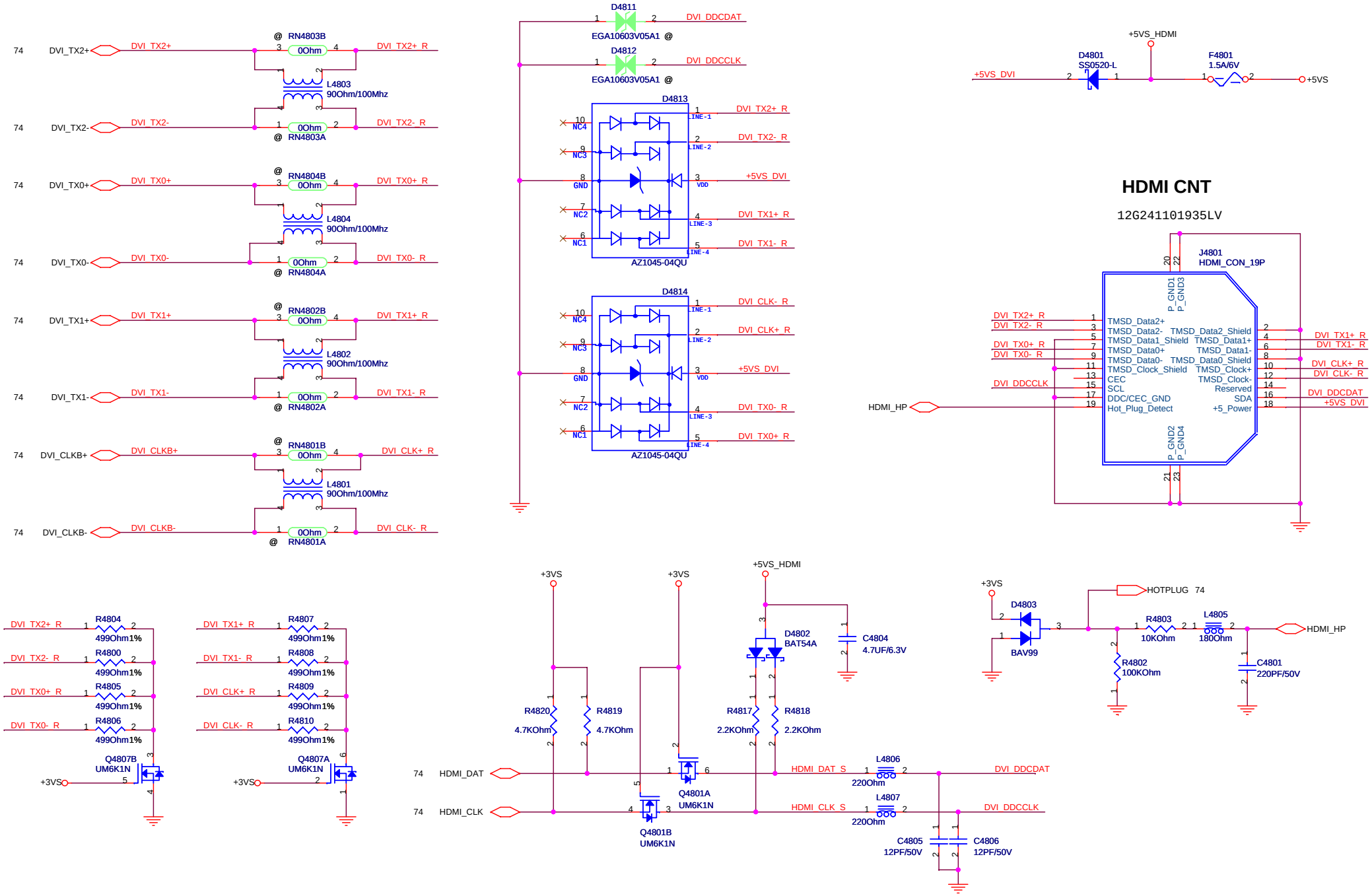

Title : HDMI		
Engineer: Tina Lee		
Size: Custom	Project Name: Rocky 40/50	Rev: 1.0
Date: Thursday, December 20, 2007	Sheet 48 of 94	

WWW.AliSaler.Com

Title :			
Engineer: Tina Lee			
Size A4	Project Name Rocky 40/50		Rev 1.0
Date: Monday, December 17, 2007		Sheet 49 of 94	

WWW.AliSaler.Com

Thermal Sensor

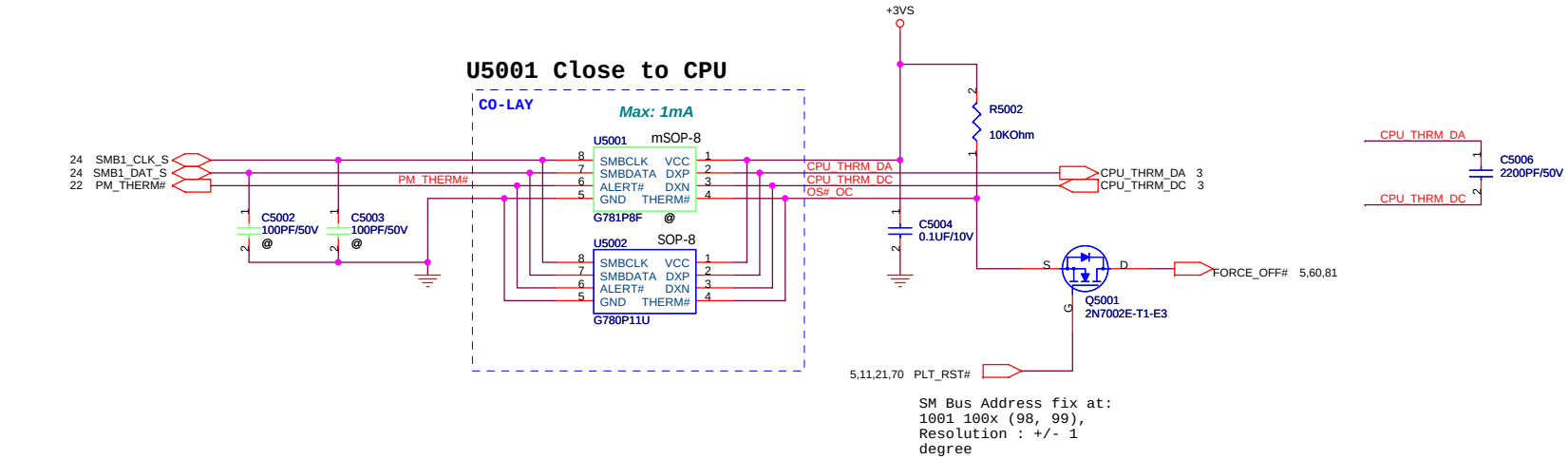

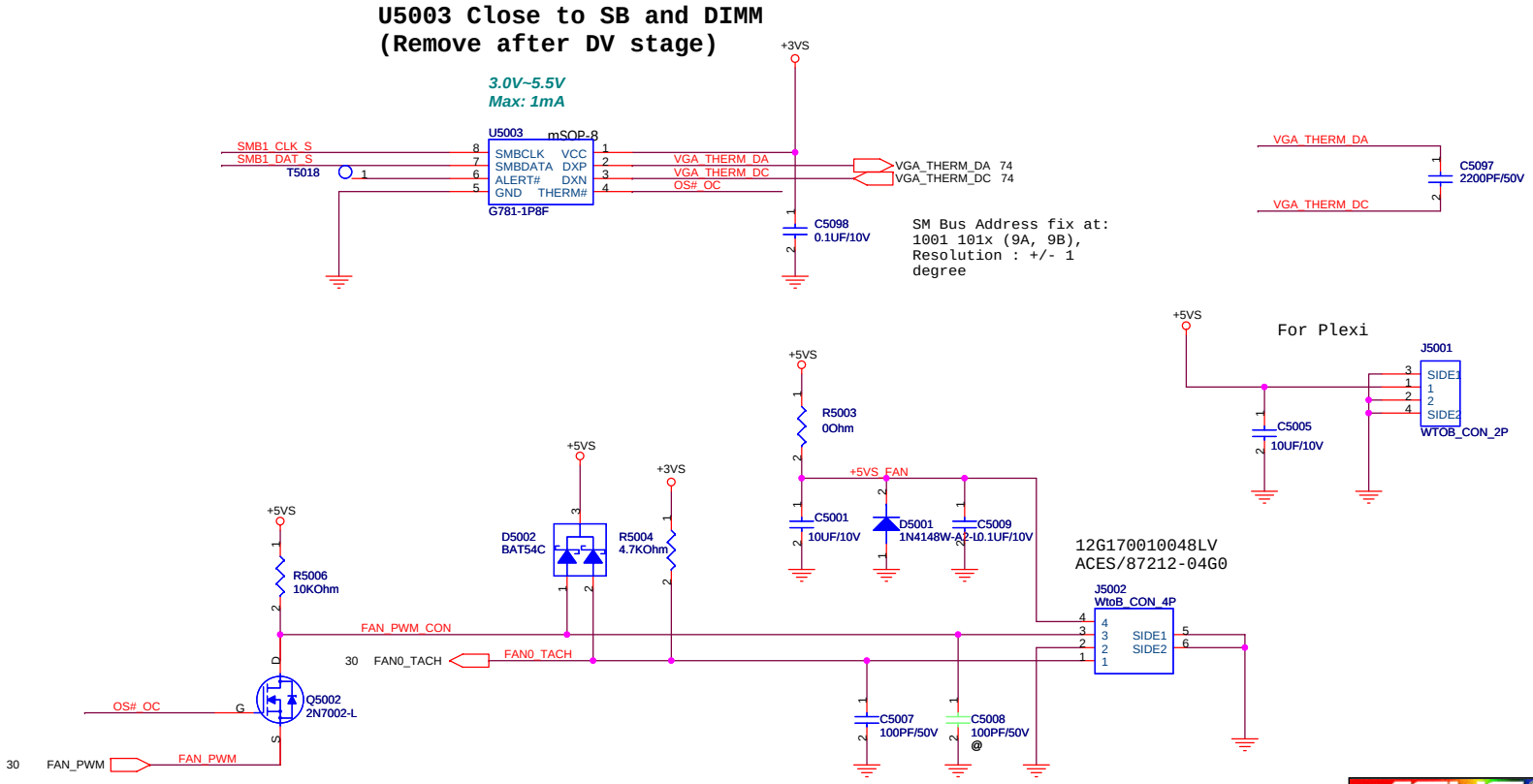

ASUS	Title : Thermal & Fan	
	Engineer: Tina Lee	
Size: Custom	Project Name: Rocky 40/50	Rev: 1.0
Date: Thursday, December 20, 2007	Sheet 50 of 94	

WWW.AliSaler.Com

ODD CON

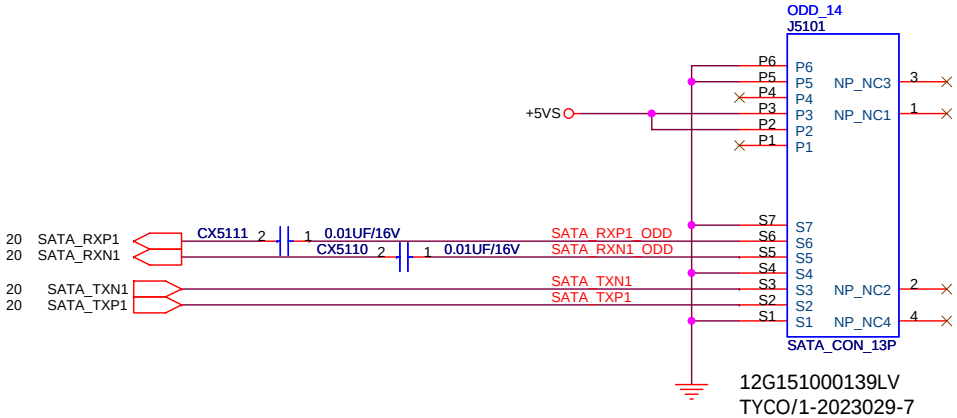

12G151000139LV
TYCO/1-2023029-7

SATA HDD CON

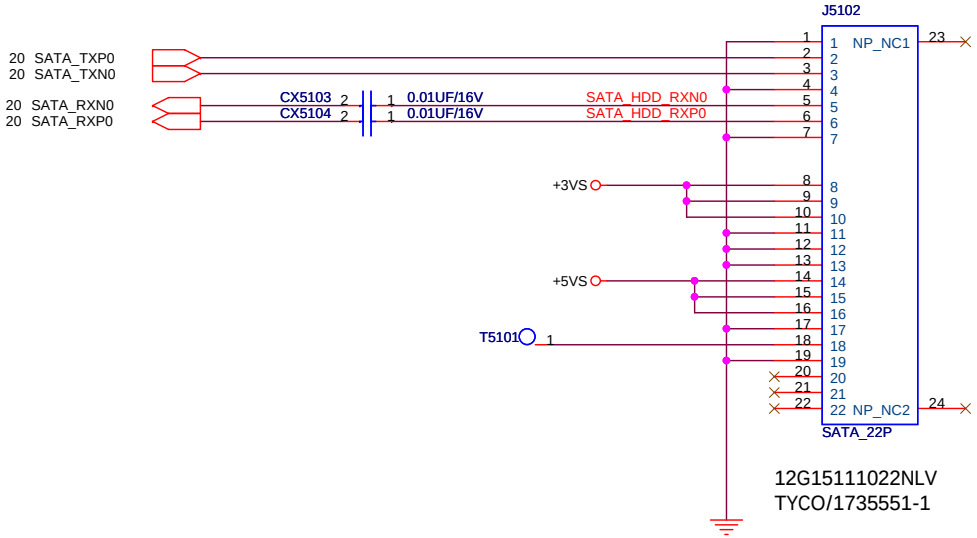

12G15111022NLV
TYCO/1735551-1

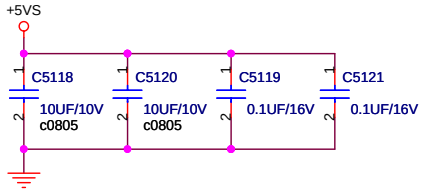

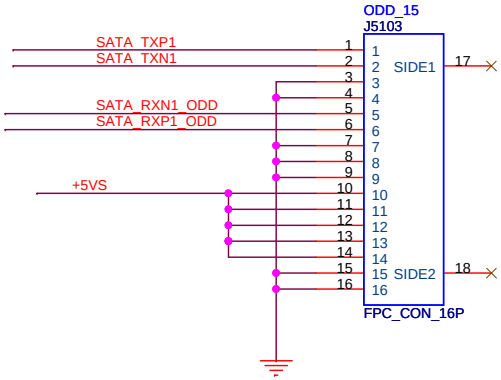

12G183101602LV
ACES/88278-16001

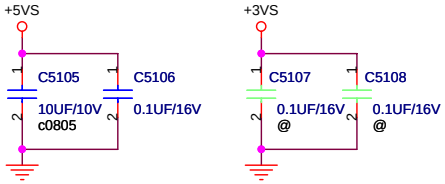

ASUS	Title : Sata HDD & Swap Bay	
	Engineer: Tina Lee	
Size: Custom	Project Name: Rocky 40/50	Rev: 1.0
Date: Thursday, December 20, 2007	Sheet 51 of 94	

WWW.AliSaler.Com

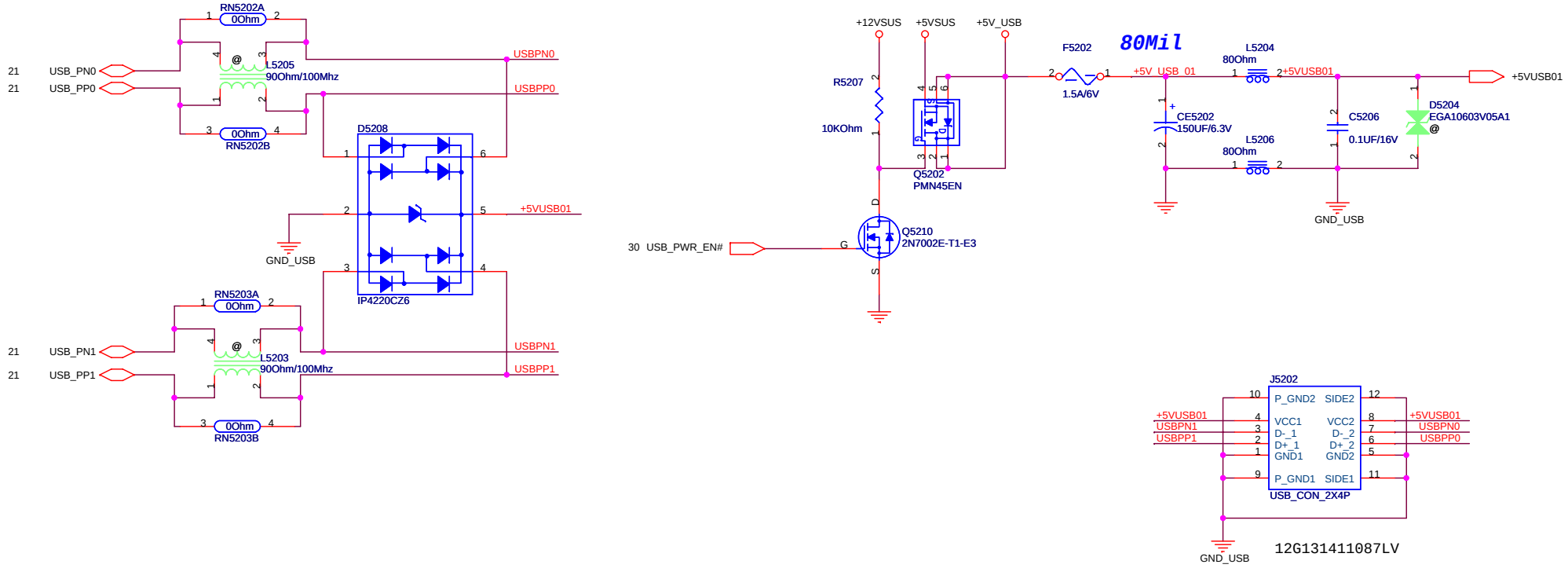

Title : USB CONN X 4		
Engineer: Tina Lee		
Size: Custom	Project Name: Rocky 40/50	Rev: 1.0
Date: Thursday, December 20, 2007	Sheet 52 of 94	

WWW.AliSaler.Com

IO BOARD

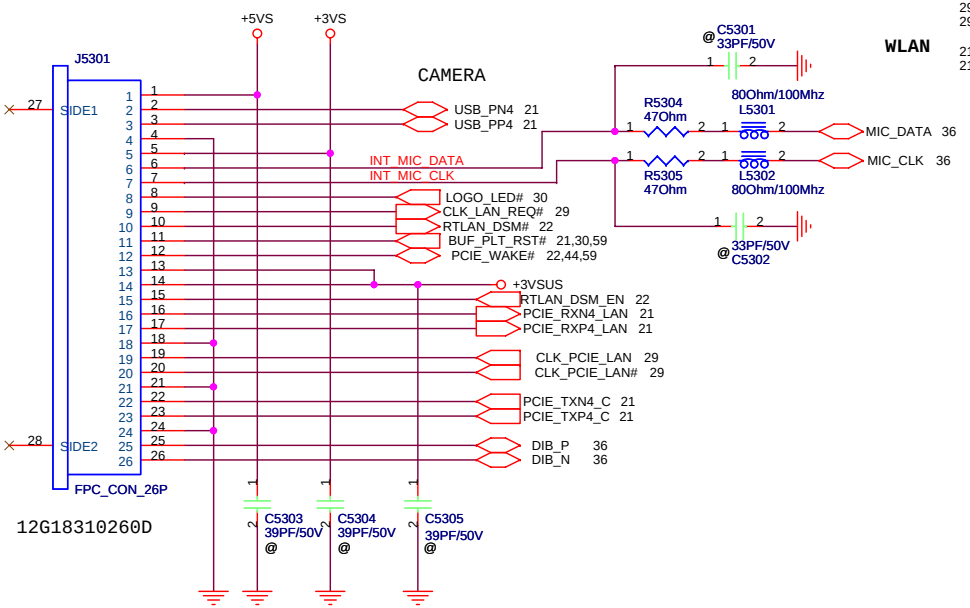

12G18310260D

SMALL BOARD

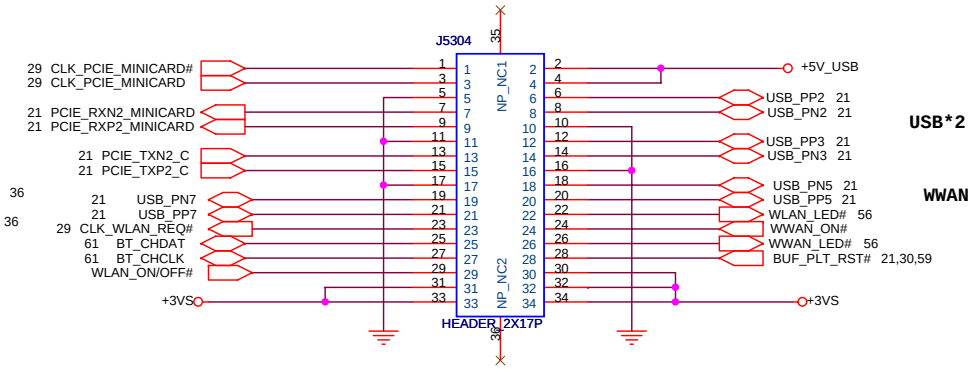

12G061200344LV

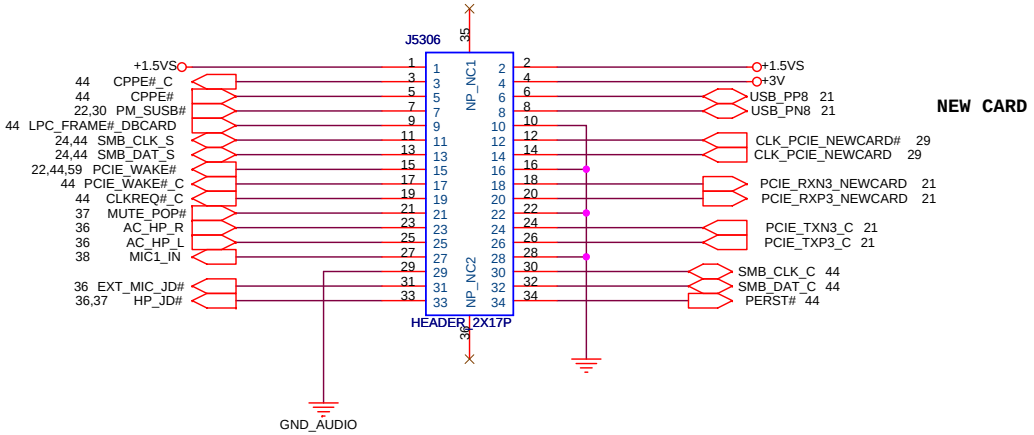

For Media Control Board

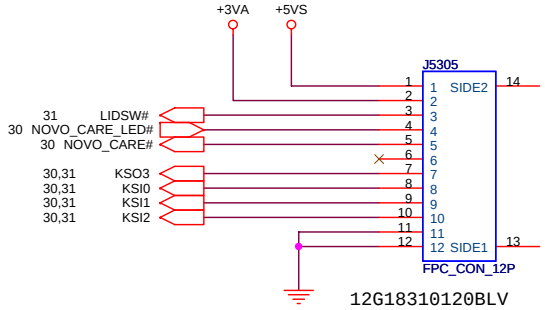

12G18310120BLV

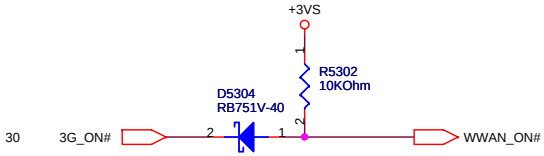

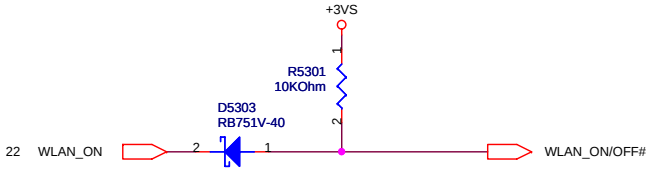

Wireless Switch

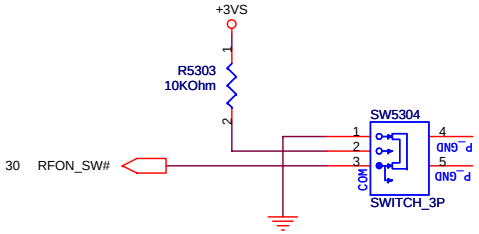

12G091070031LV
ALPS/SSSS710603

Title : IO BOARD		
Engineer: Tina Lee		
Size: Custom	Project Name: Rocky 40/50	Rev: 1.0
Date: Thursday, December 20, 2007	Sheet 53 of 94	

WWW.AliSaler.Com

Title : Port Docking			
Engineer: *Tina Lee*			
Size A4	Project Name **Rocky 40/50**		Rev 1.0
Date: Monday, December 17, 2007		Sheet 54 of 94	

WWW.AliSaler.Com

Title :	Super I/O & FIR
Engineer:	*Tina Lee*
Size: A4	Project Name: **Rocky 40/50**
Rev: 1.0	
Date: Monday, December 17, 2007	Sheet 55 of 94

WWW.AliSaler.Com

LED CONN

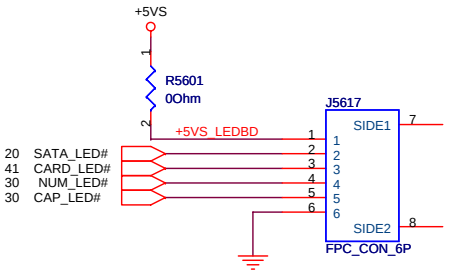

12G183100603

Power Button CONN

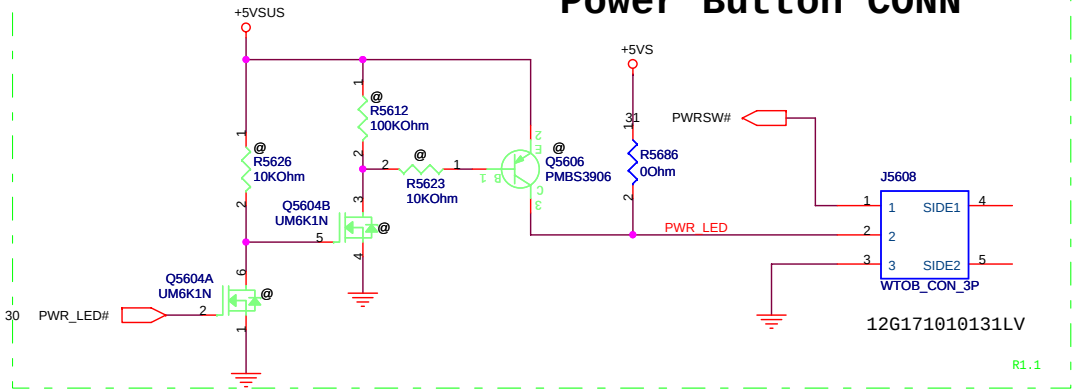

12G171010131LV

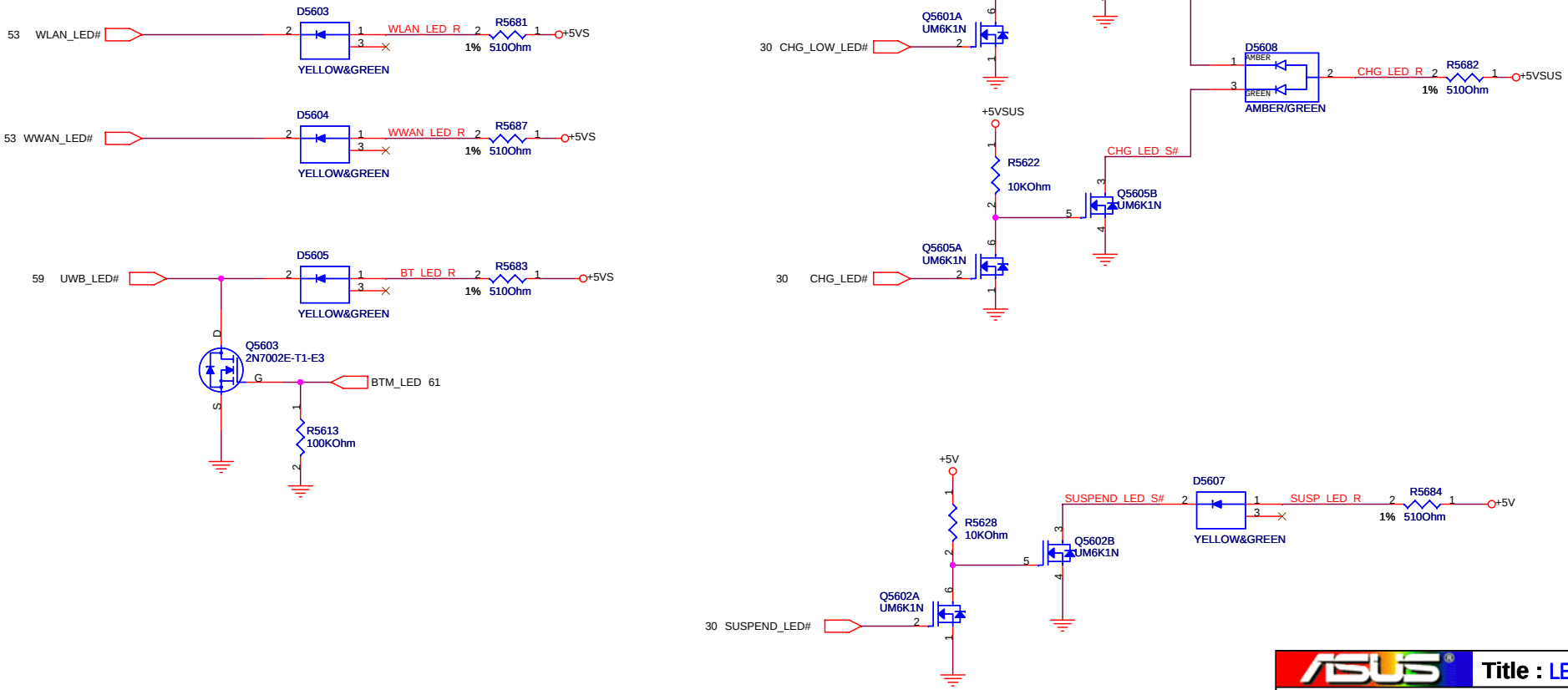

ASUS	Title : LED/TP/SW	
	Engineer: Tina Lee	
Size: Custom	Project Name: Rocky 40/50	Rev: 1.0
Date: Thursday, December 20, 2007	Sheet 56 of 94	

WWW.AliSaler.Com

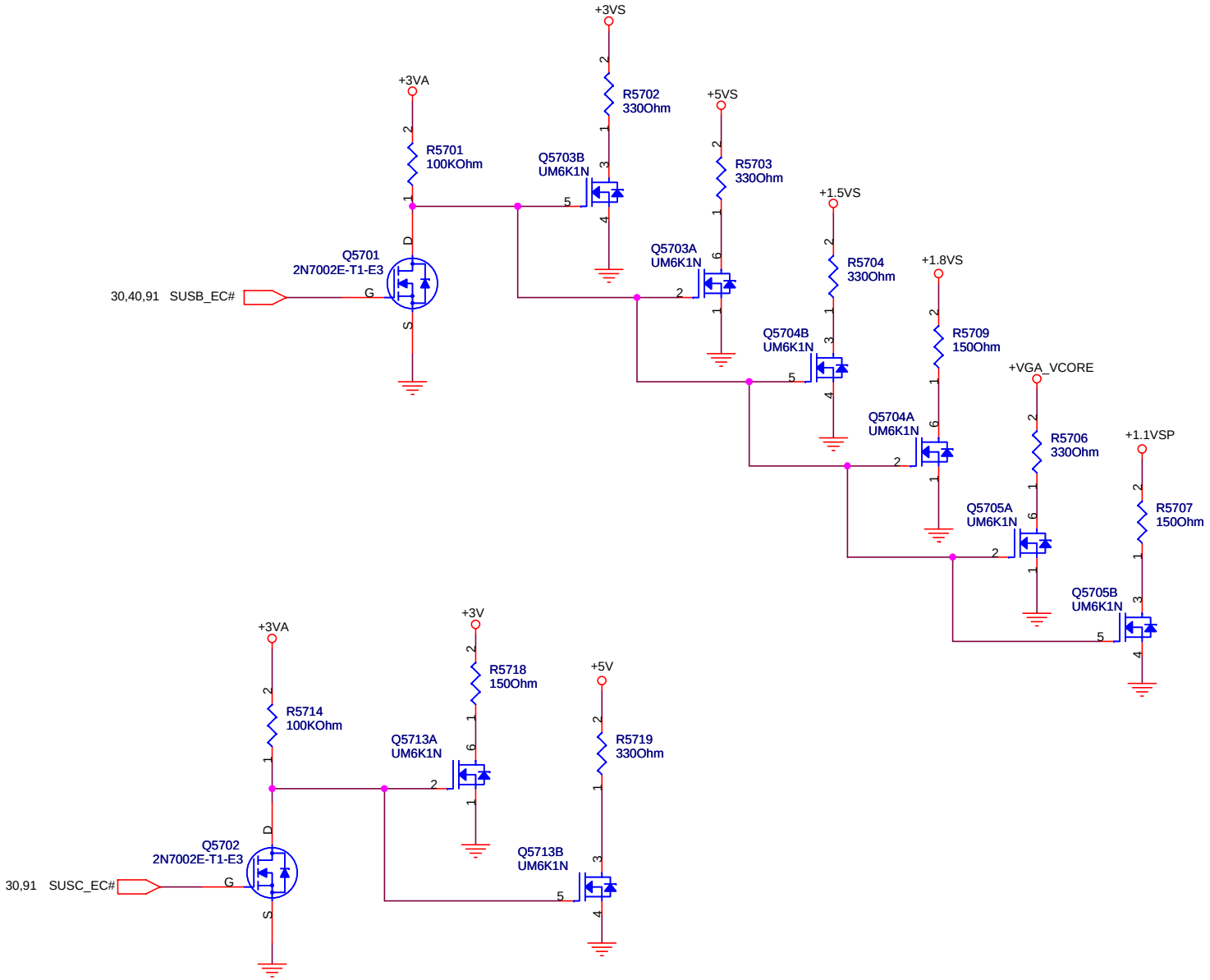

ASUS	Title : DISCHARGE	
	Engineer: Tina Lee	
Size: Custom	Project Name: Rocky 40/50	Rev: 1.0
Date: Thursday, December 20, 2007	Sheet 57 of 94	

WWW.AliSaler.Com

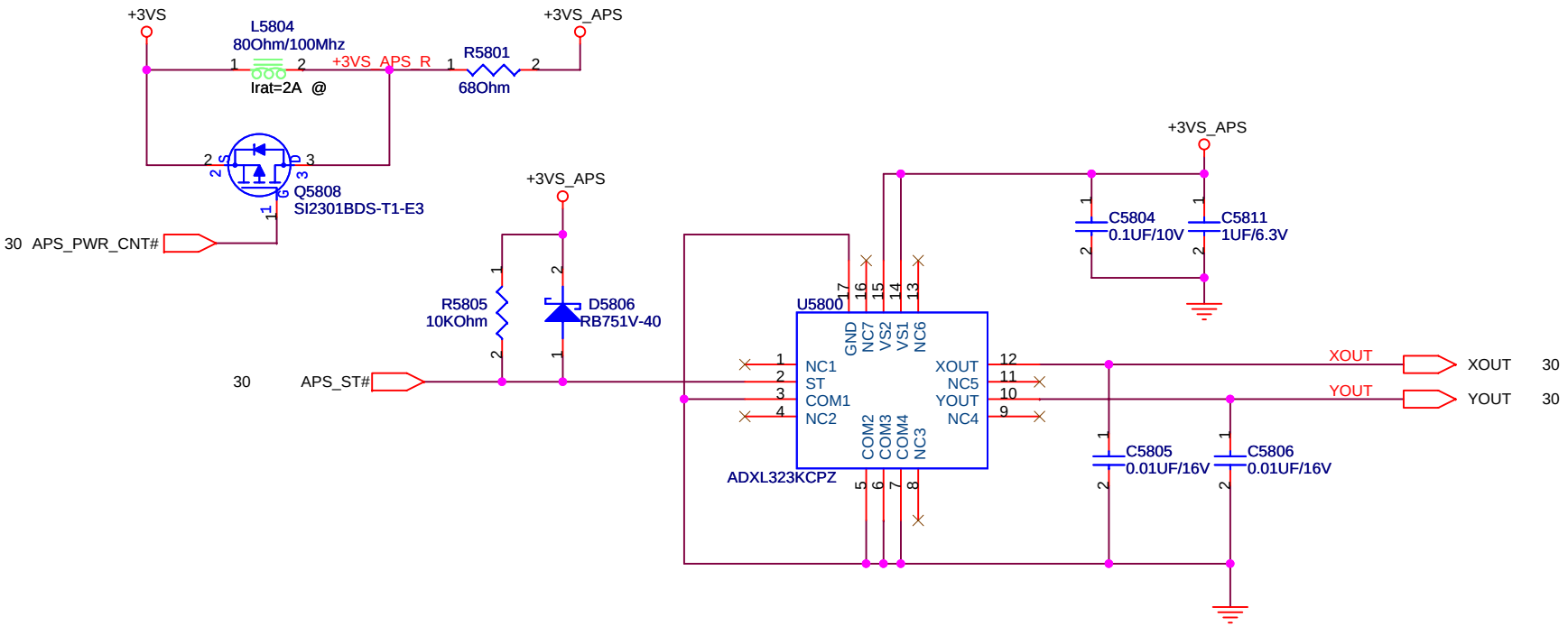

ASUS	Title : SMS	
	Engineer: *Tina Lee*	
Size A4	Project Name Rocky 40/50	Rev 1.0
Date: Thursday, December 20, 2007	Sheet 58 of 94	

WWW.AliSaler.Com

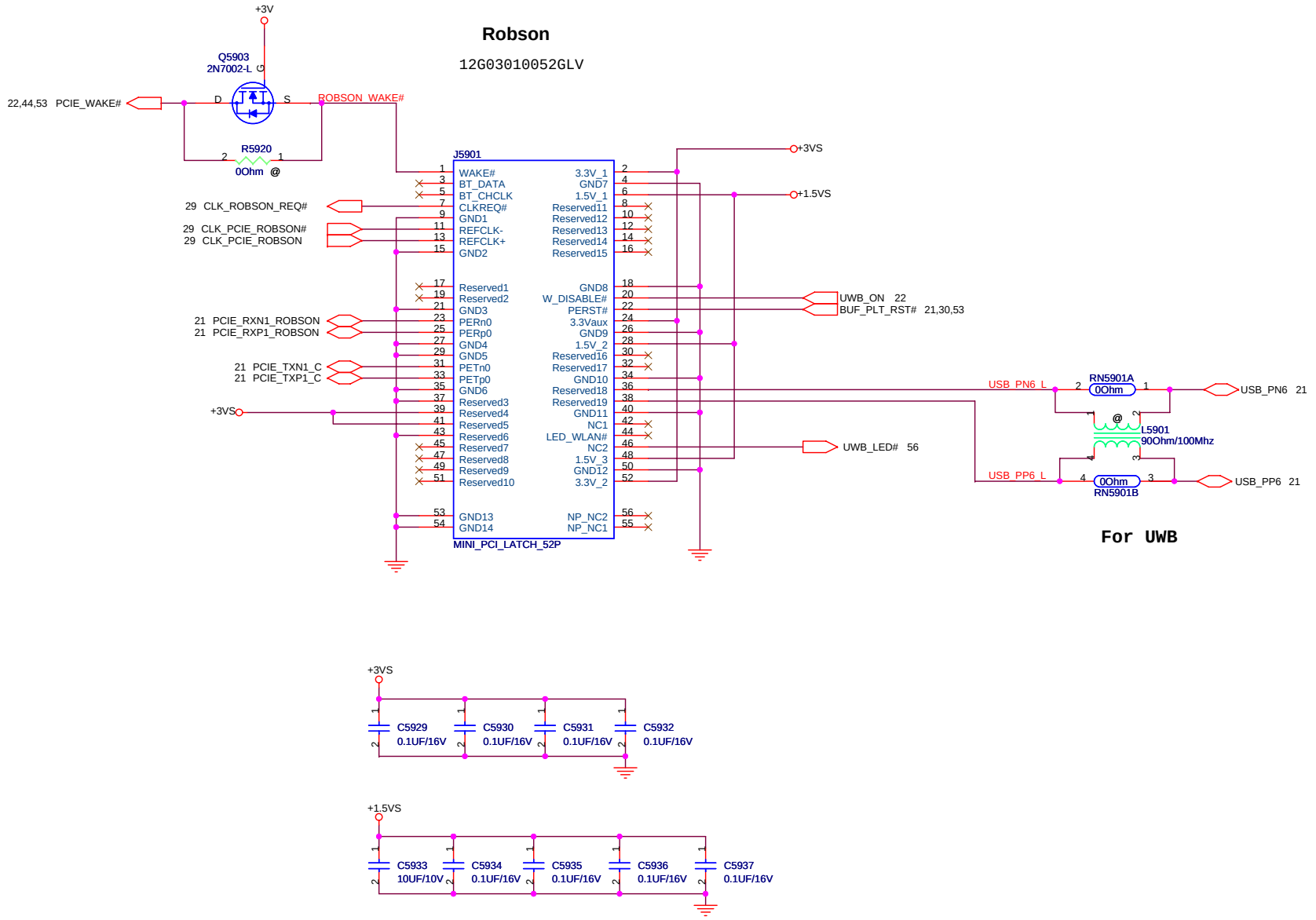

Title : Mini Card		
Engineer: Tina Lee		
Size: Custom	Project Name: Rocky 40/50	Rev: 1.0
Date: Thursday, December 20, 2007	Sheet 59 of 94	

WWW.AliSaler.Com

DC IN CONN

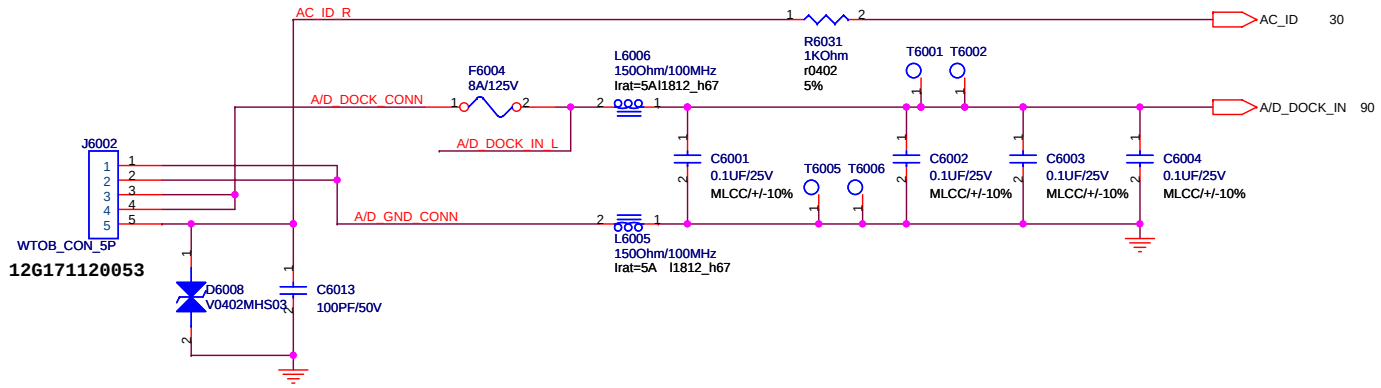

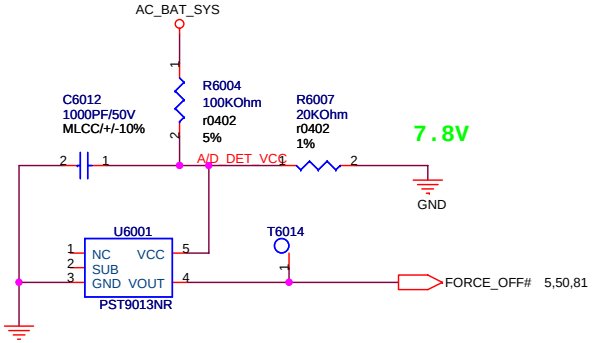

Without Battery & Pull out Adapter

Battery CONN

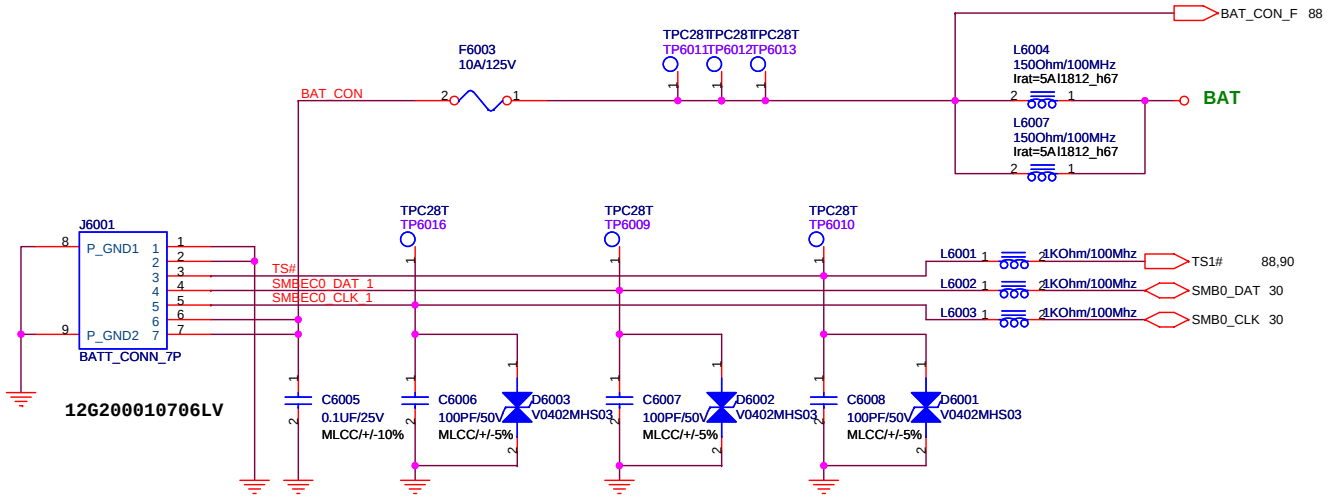

ASUS	Title : DC Jack & Battery CONN	
	Engineer: Morris Tseng	
Size: Custom	Project Name: Rocky40/50	Rev: 1.0
Date: Thursday, December 20, 2007	Sheet 60 of 94	

WWW.AliSaler.Com

Blue Tooth

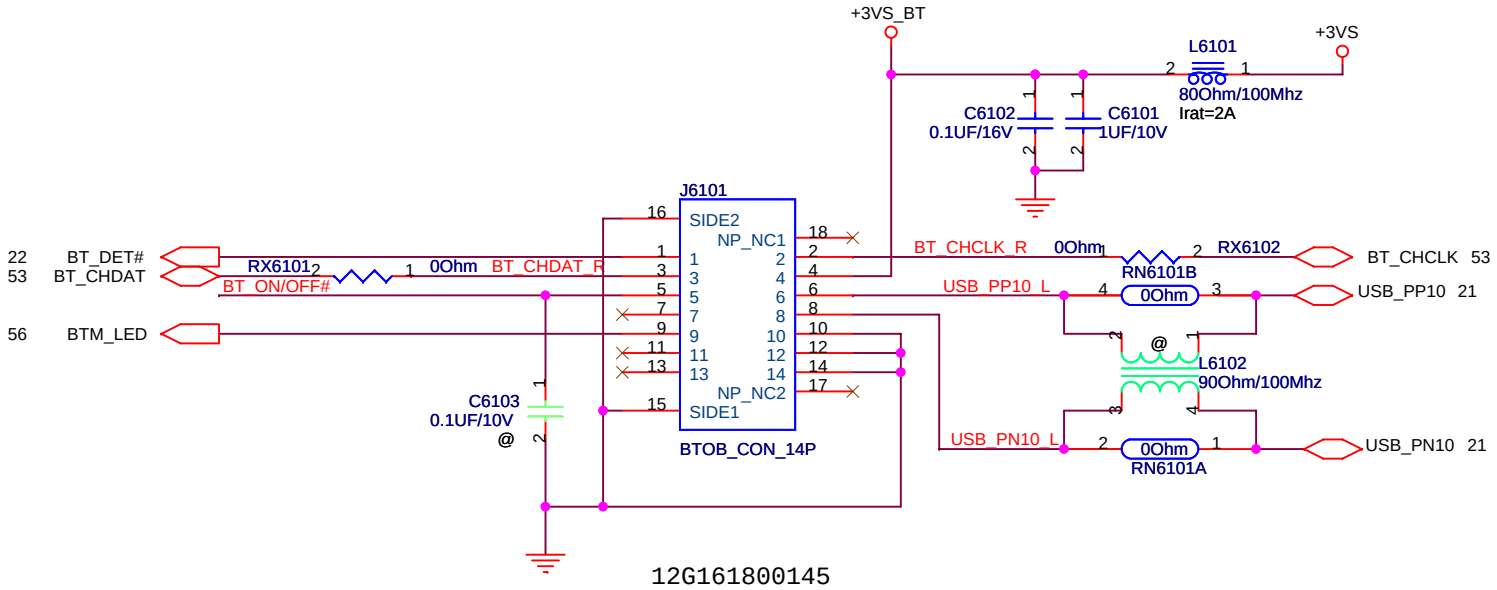

12G161800145

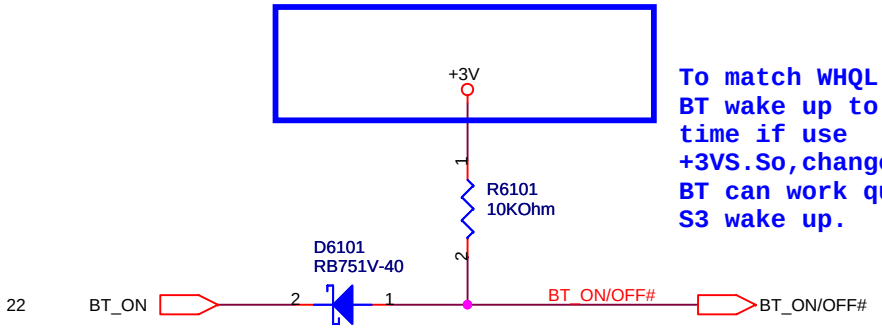

To match WHQL test.Due to BT wake up to spend much time if use +3VS.So,change to +3V,let BT can work quickly when S3 wake up.

From GPIO27 ICH-9

ASUS	Title : BlueTooth	
	Engineer: *Tina Lee*	
Size A4	Project Name **Rocky 40/50**	Rev 1.0
Date: Thursday, December 20, 2007	Sheet 61 of 94	

WWW.AliSaler.Com

ASUS	Title : TPM		
	Engineer: *Tina Lee*		
Size A4	Project Name **Rocky 40/50**		Rev 1.0
Date: Monday, December 17, 2007	Sheet 62 of 94		

WWW.AliSaler.Com

Finger Print BOARD

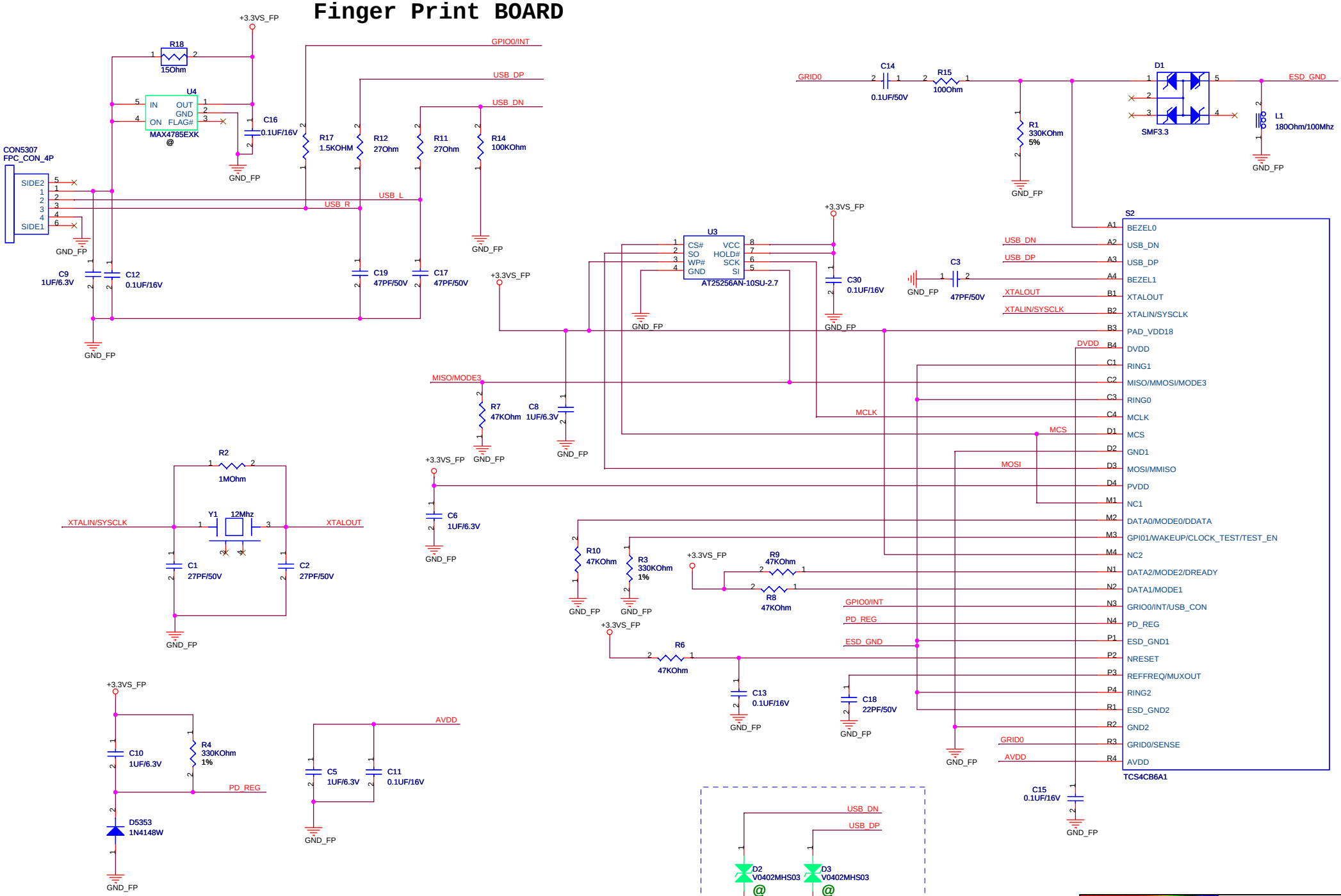

ASUS	Title : FP		
	Engineer: Sean		
Size: Custom	Project Name: ROCKY		Rev: 1.3
Date: Monday, December 17, 2007	Sheet 63 of 94		

WWW.AliSaler.Com

Title :			
Engineer: Tina Lee			
Size A4	Project Name Rocky 40/50		Rev 1.0
Date: Monday, December 17, 2007		Sheet 64 of 94	

WWW.AliSaler.Com

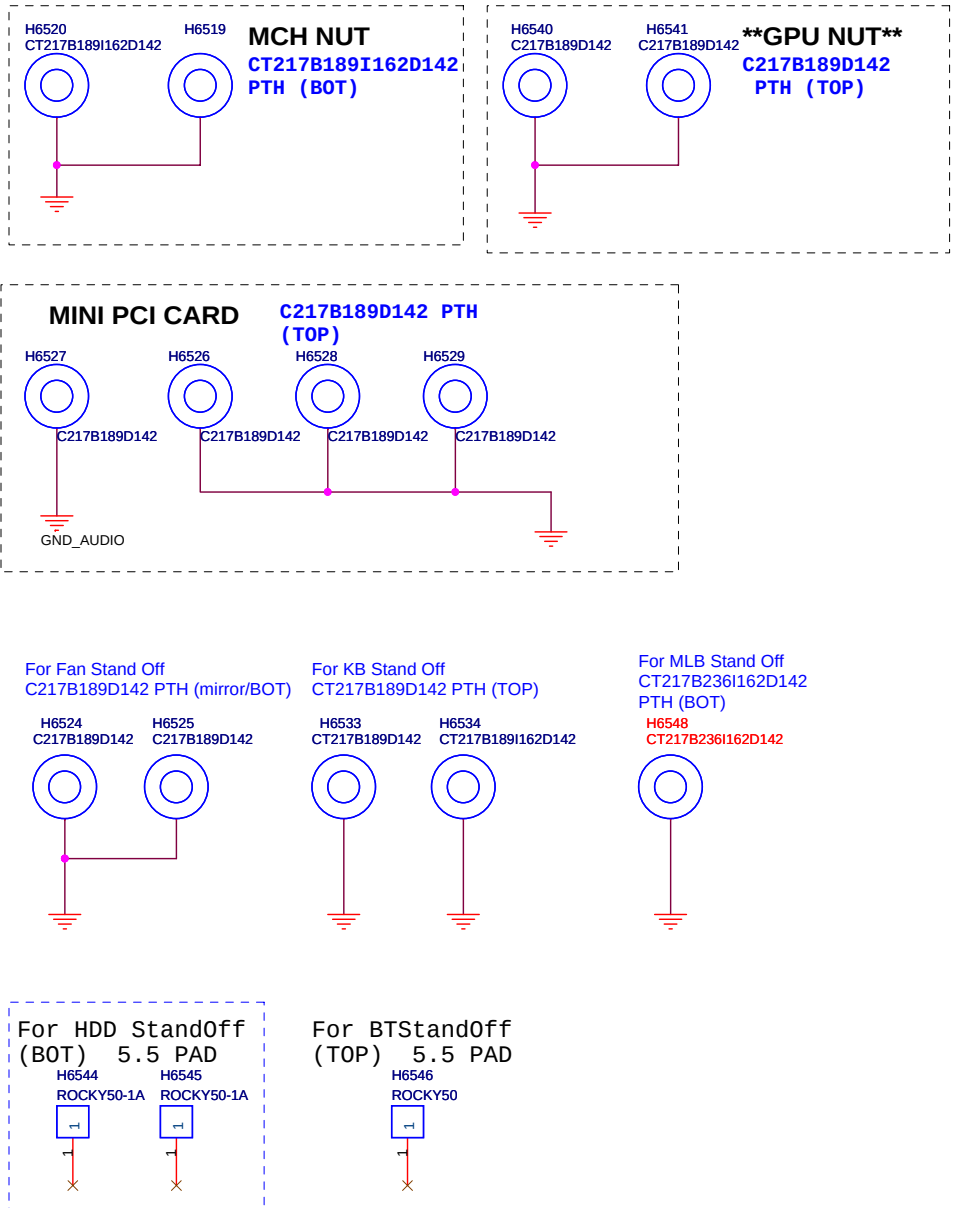

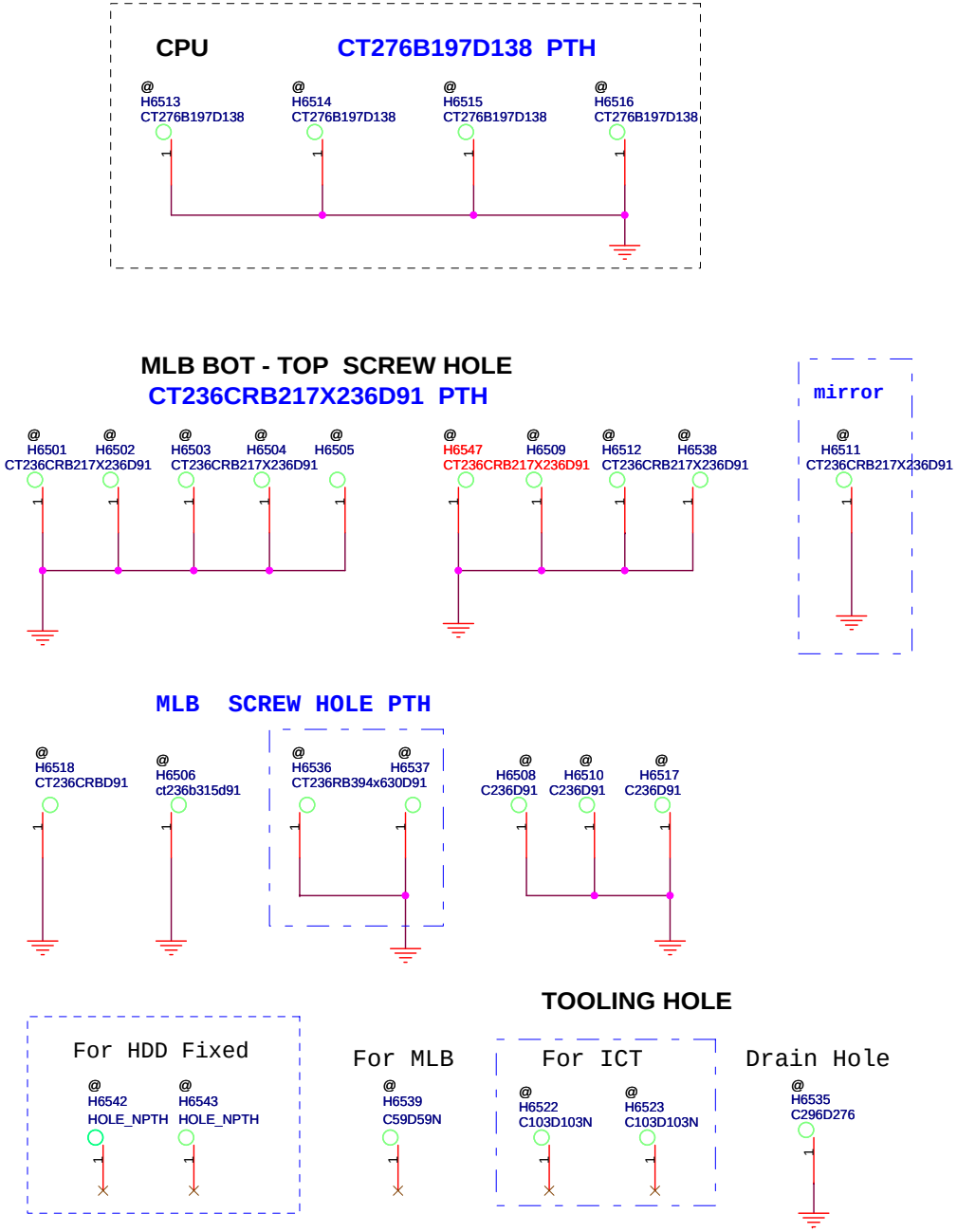

ASUS	Title MDC NUT & Hinksink NUT	
	Engineer: Tina Lee	
Size Custom	Project Name Rocky 40/50	Rev 1.0
Date: Monday, December 17, 2007	Sheet 65 of 94	

WWW.AliSaler.Com

ASUS	Title : E-SATA	
	Engineer: *Tina Lee*	
Size A4	Project Name **Rocky 40/50**	Rev 1.0
Date: Monday, December 17, 2007	Sheet 66 of 94	

WWW.AliSaler.Com

ASUS	Title : Minicard card & Nut			
	Engineer: *Tina Lee*			
Size A4	Project Name **Rocky 40/50**			Rev 1.0
Date: Monday, December 17, 2007		Sheet 67 of 94		

WWW.AliSaler.Com

ASUS	Title : XDP		
	Engineer: *Tina Lee*		
Size A4	Project Name **Rocky 40/50**		Rev 1.0
Date: Monday, December 17, 2007	Sheet 68 of 94		

WWW.AliSaler.Com

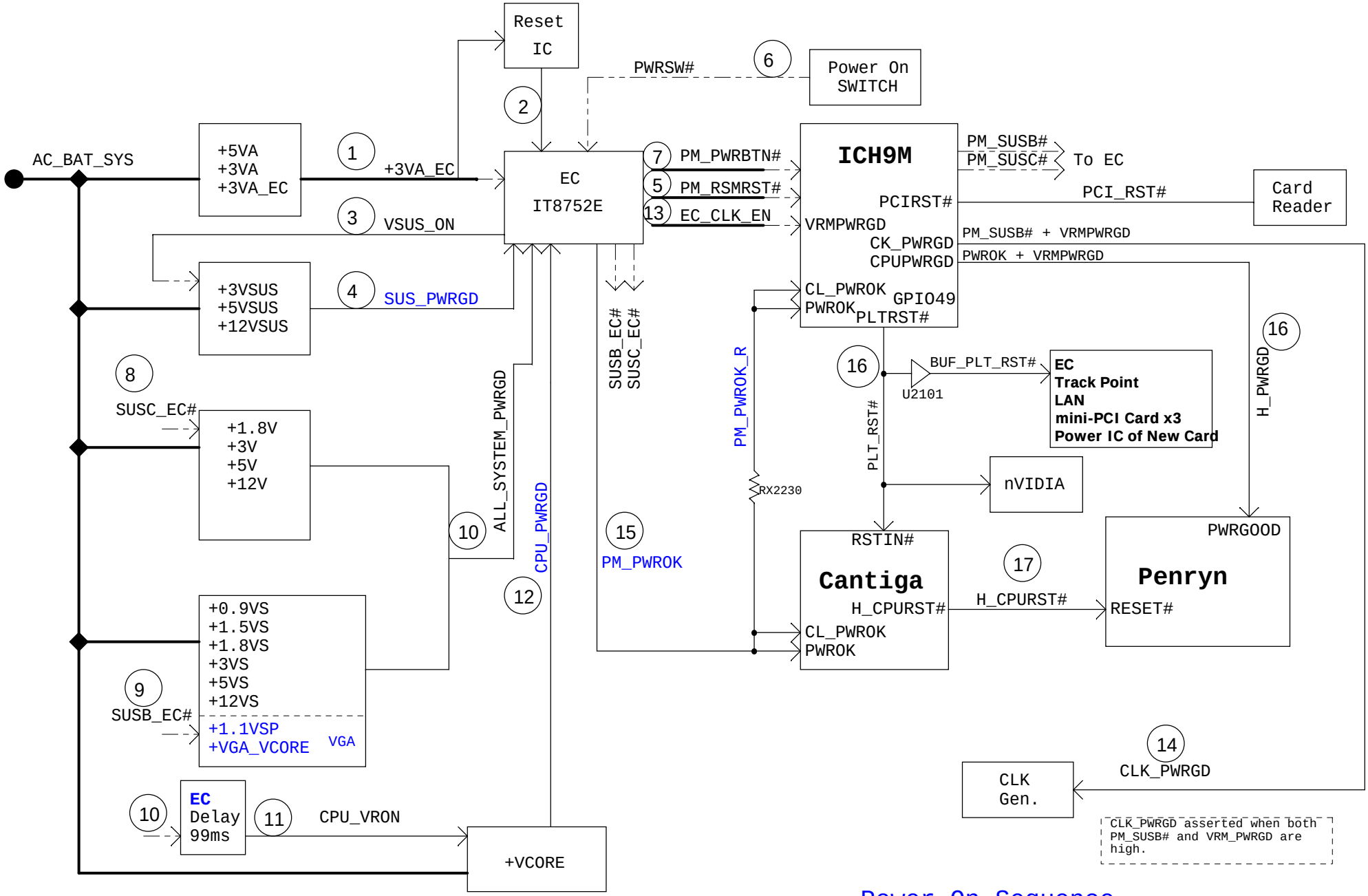

Power On Sequence

1 → 17

ASUS	Title : Power Sequence	
	Engineer: Tina Lee	
Size: Custom	Project Name: Rocky 40/50	Rev: 1.0
Date: Monday, December 17, 2007	Sheet 69 of 94	

WWW.AliSaler.Com

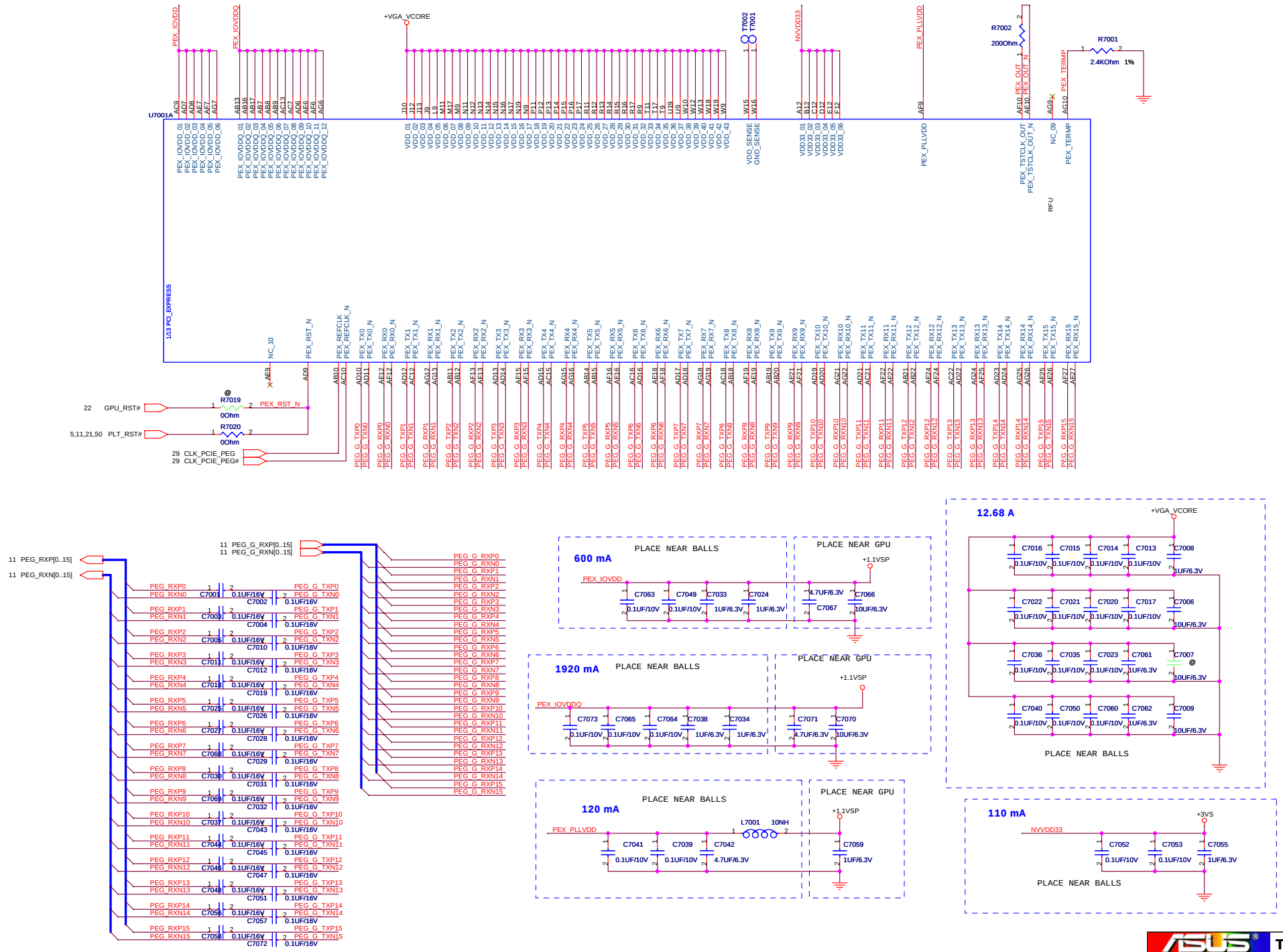

Title : NB9M-GS(1)

Engineer: Tina Lee

Size	Project Name	Rev
Custom	Rocky 40/50	1.0

Date: Thursday, December 20, 2007 Sheet 70 of 94

WWW.AliSaler.Com

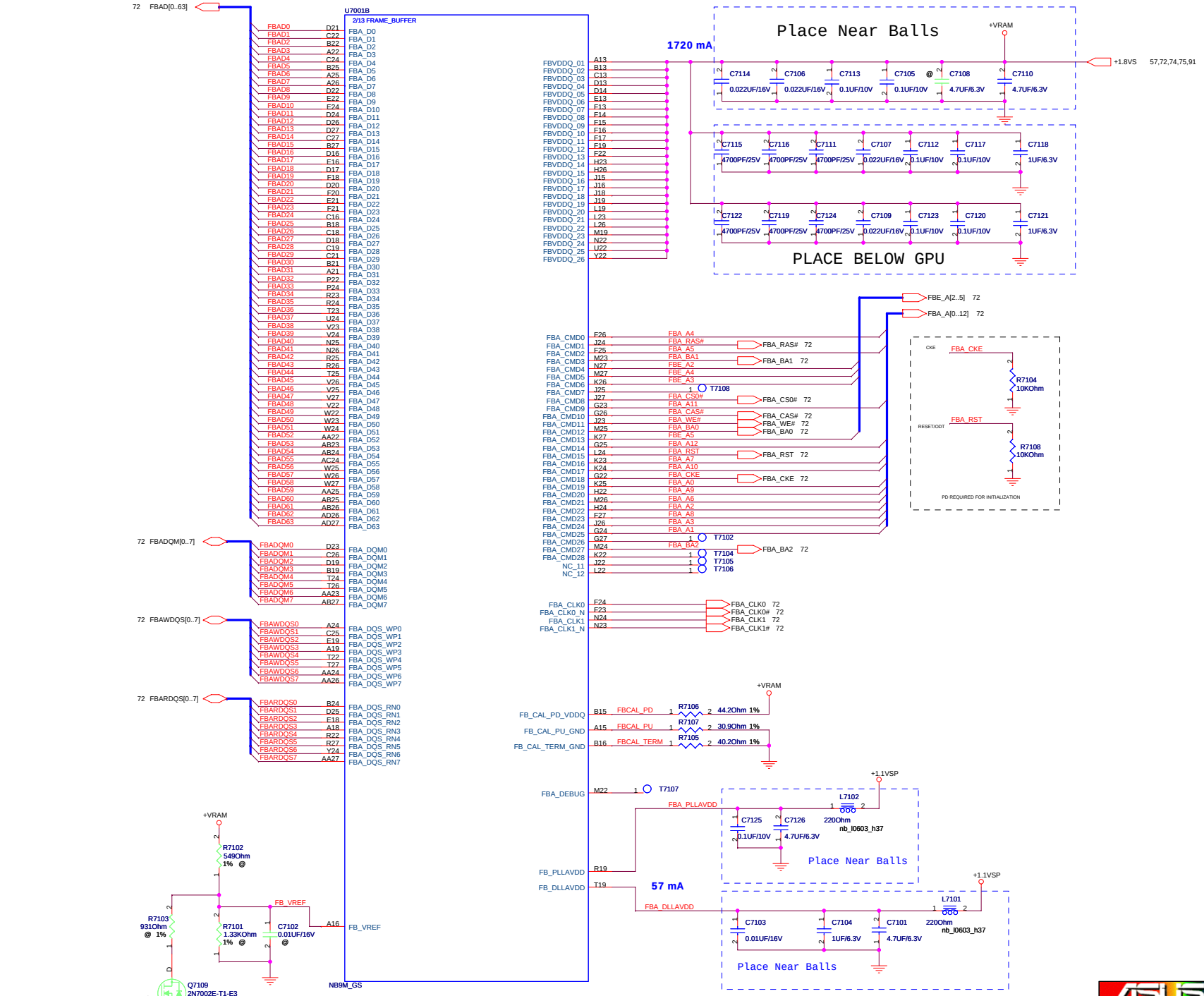

Title :	NB9M-GS(2)
Engineer:	Tina Lee
Size: Custom	Project Name: Rocky 40/50
Rev	1.0
Date: Thursday, December 20, 2007	Sheet 71 of 94

WWW.AliSaler.Com

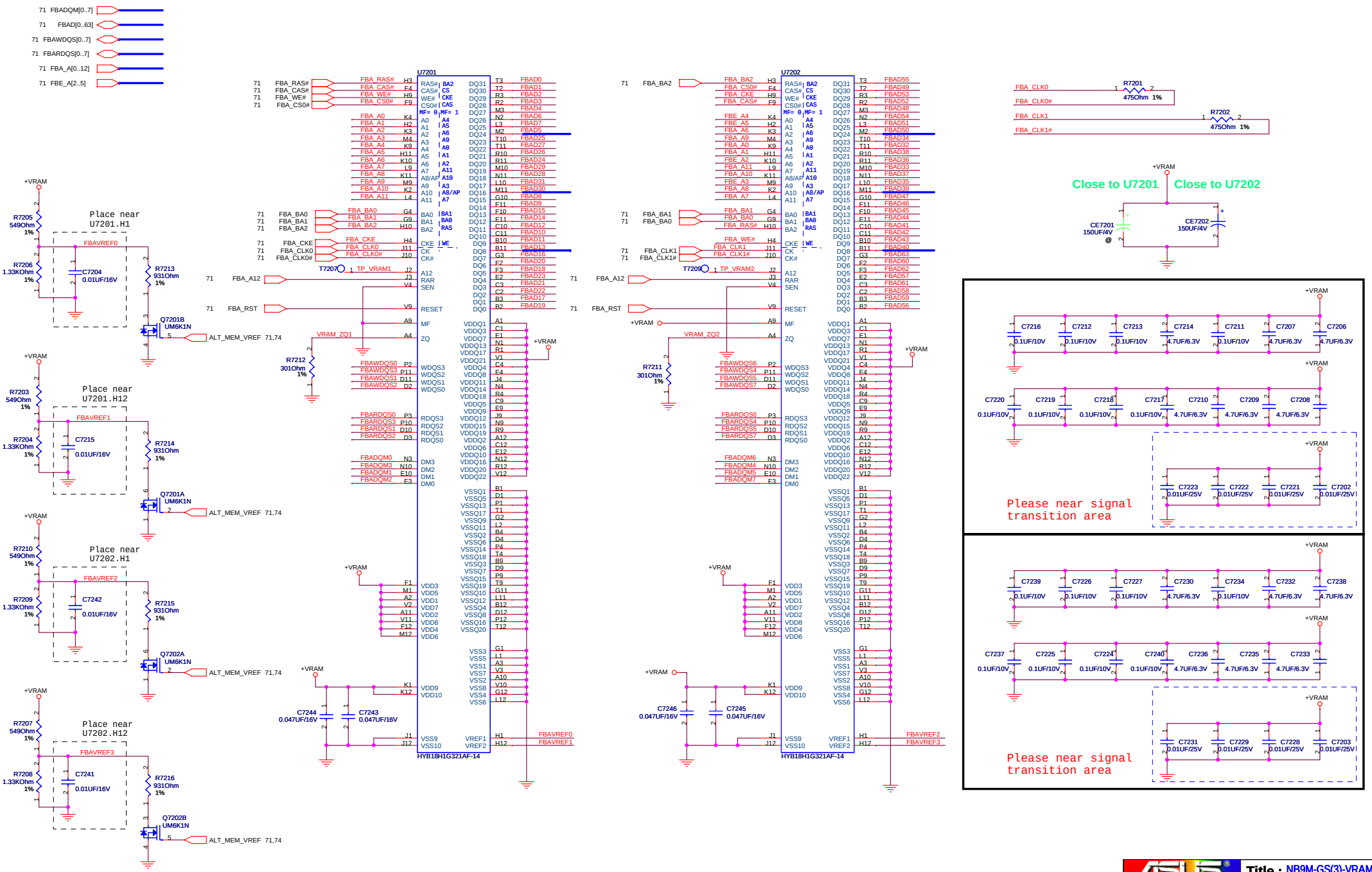

Title : NB9M-GS(3)-VRAM		
Engineer: Tina Lee		
Size: Custom	Project Name: Rocky 40/50	Rev: 1.0
Date: Thursday, December 20, 2007	Sheet 72 of 94	

WWW.AliSaler.Com

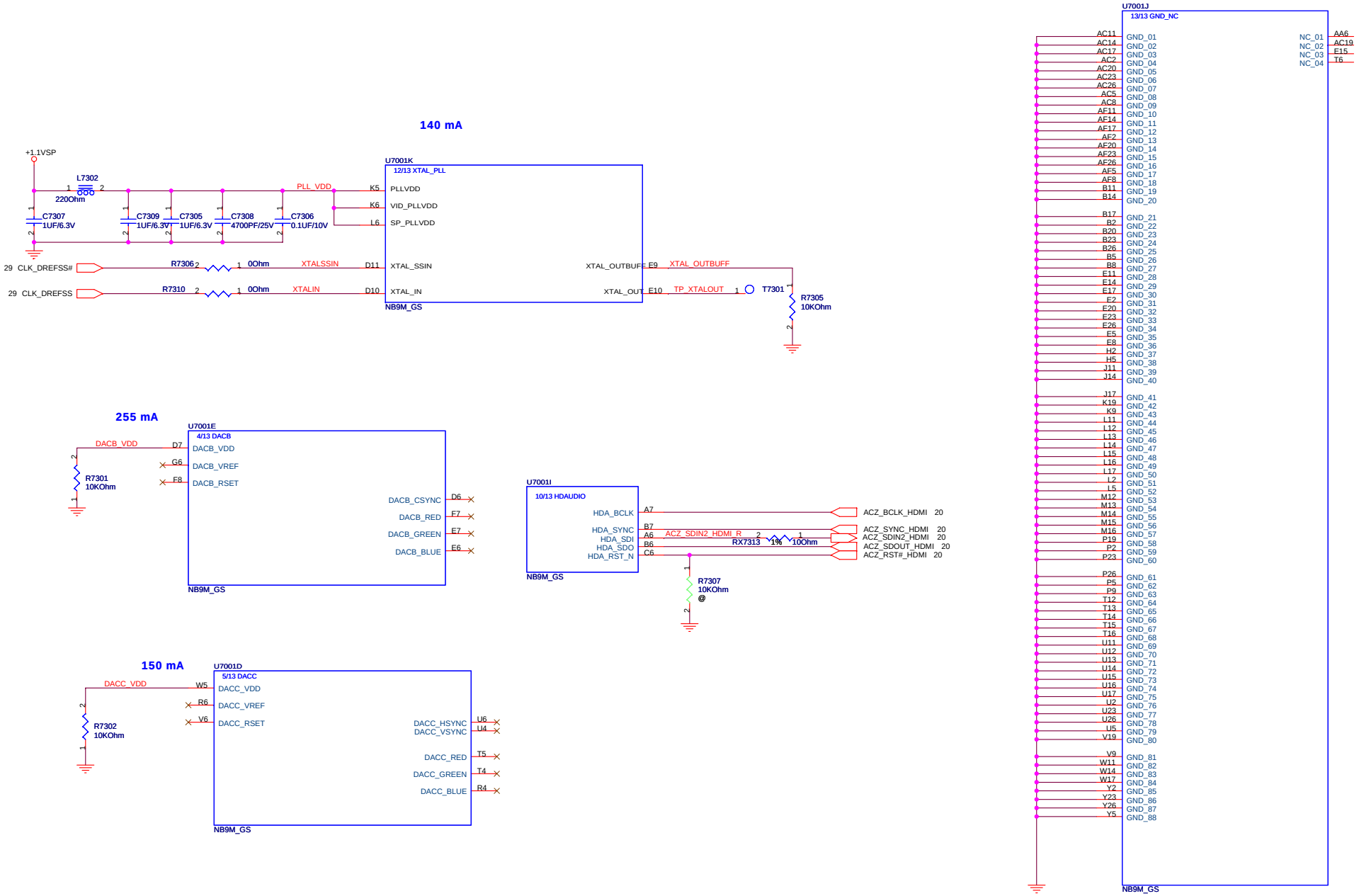

Title : NB9M-GS(4)		
Engineer: Tina Lee		
Size: Custom	Project Name: Rocky 40/50	Rev: 1.0
Date: Thursday, December 20, 2007	Sheet 73 of 94	

WWW.AliSaler.Com

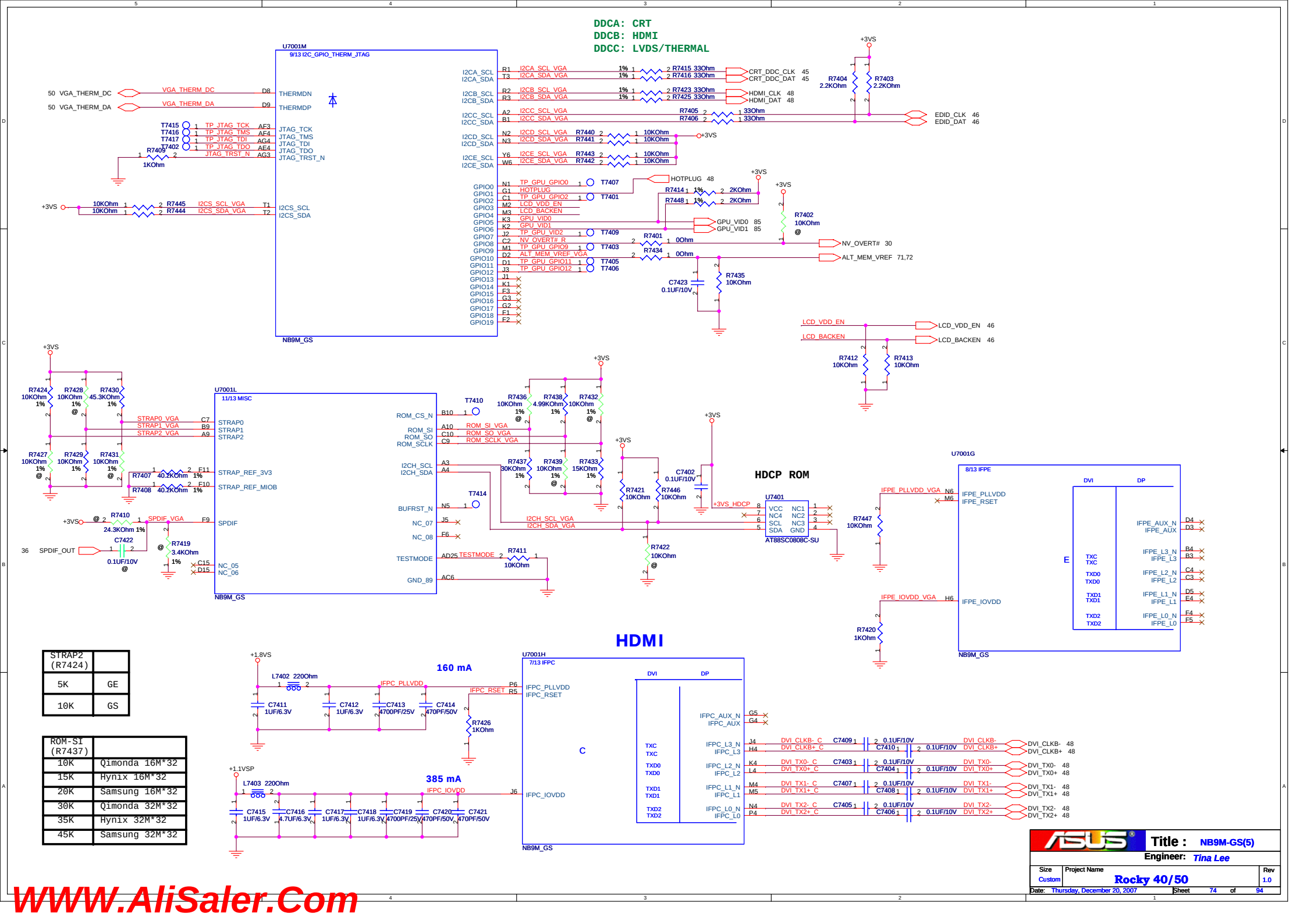

WWW.AliSaler.Com

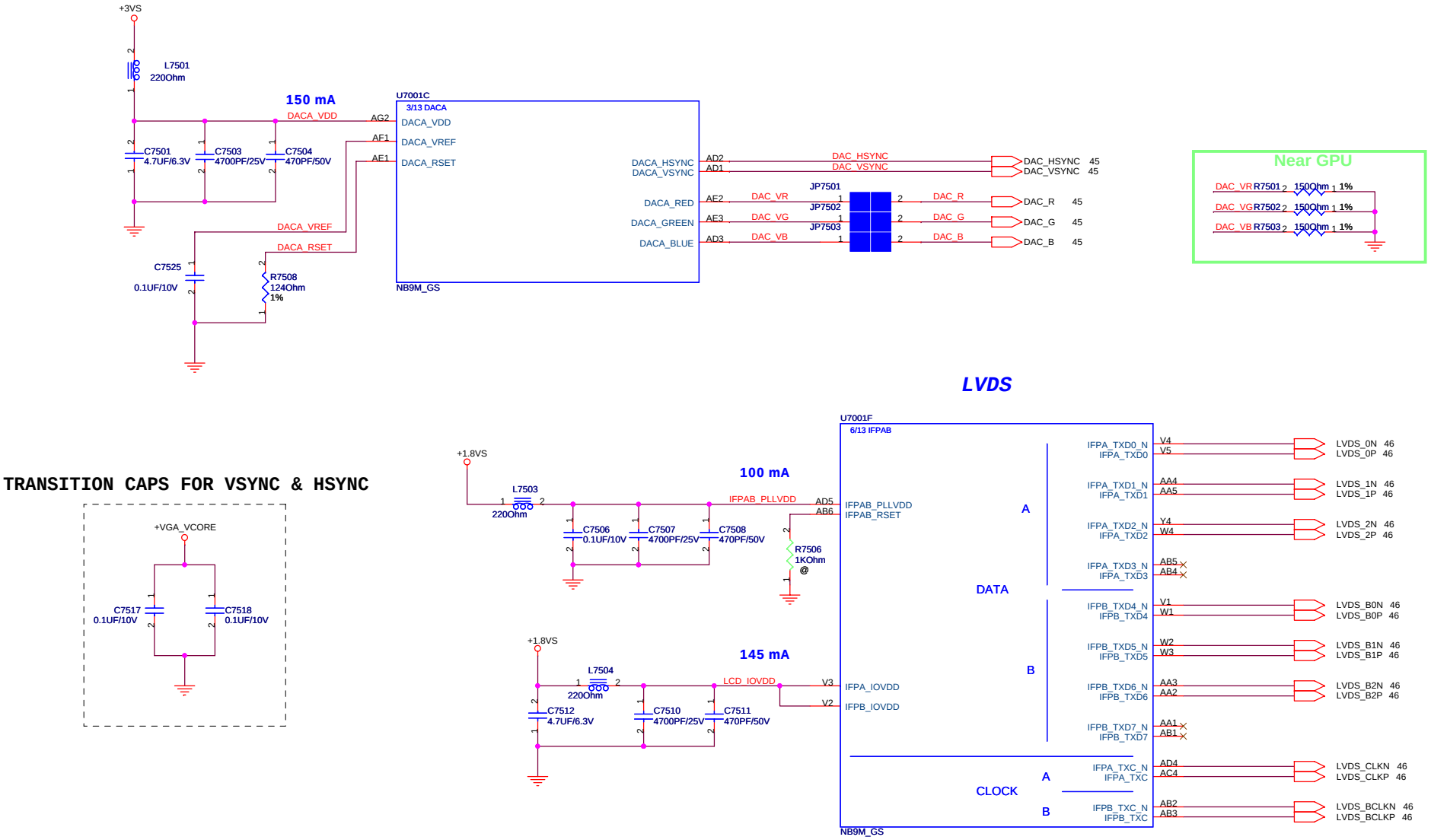

ASUS	Title : NB9M-GS(6)	
	Engineer: Tina Lee	
Size: Custom	Project Name: Rocky 40/50	Rev: 1.0
Date: Thursday, December 20, 2007	Sheet 75 of 94	

WWW.AliSaler.Com

IO BOARD

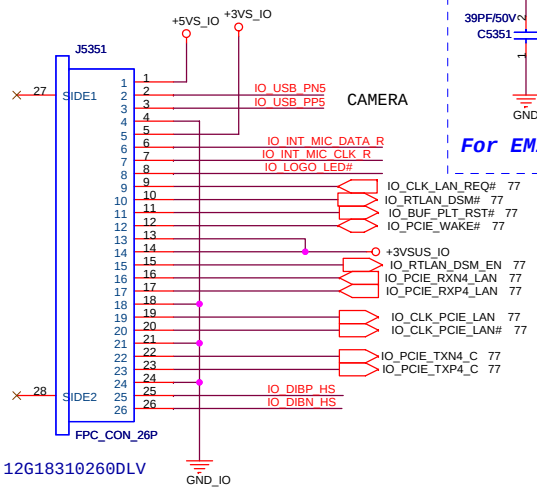

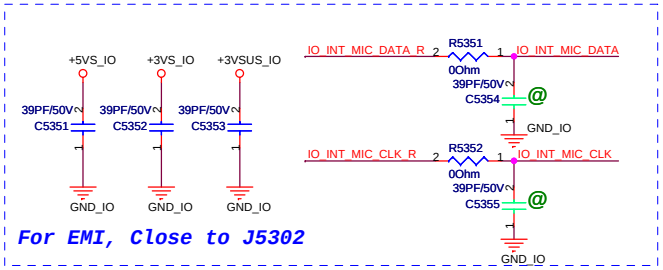

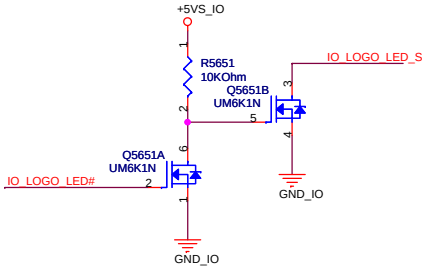

CAMERA

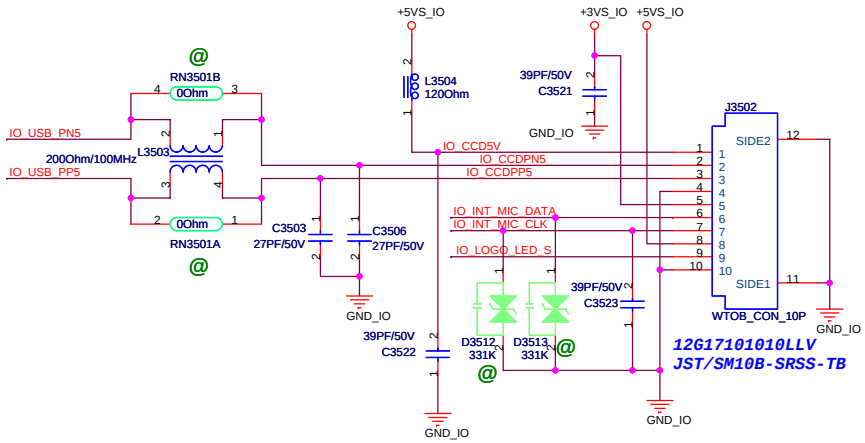

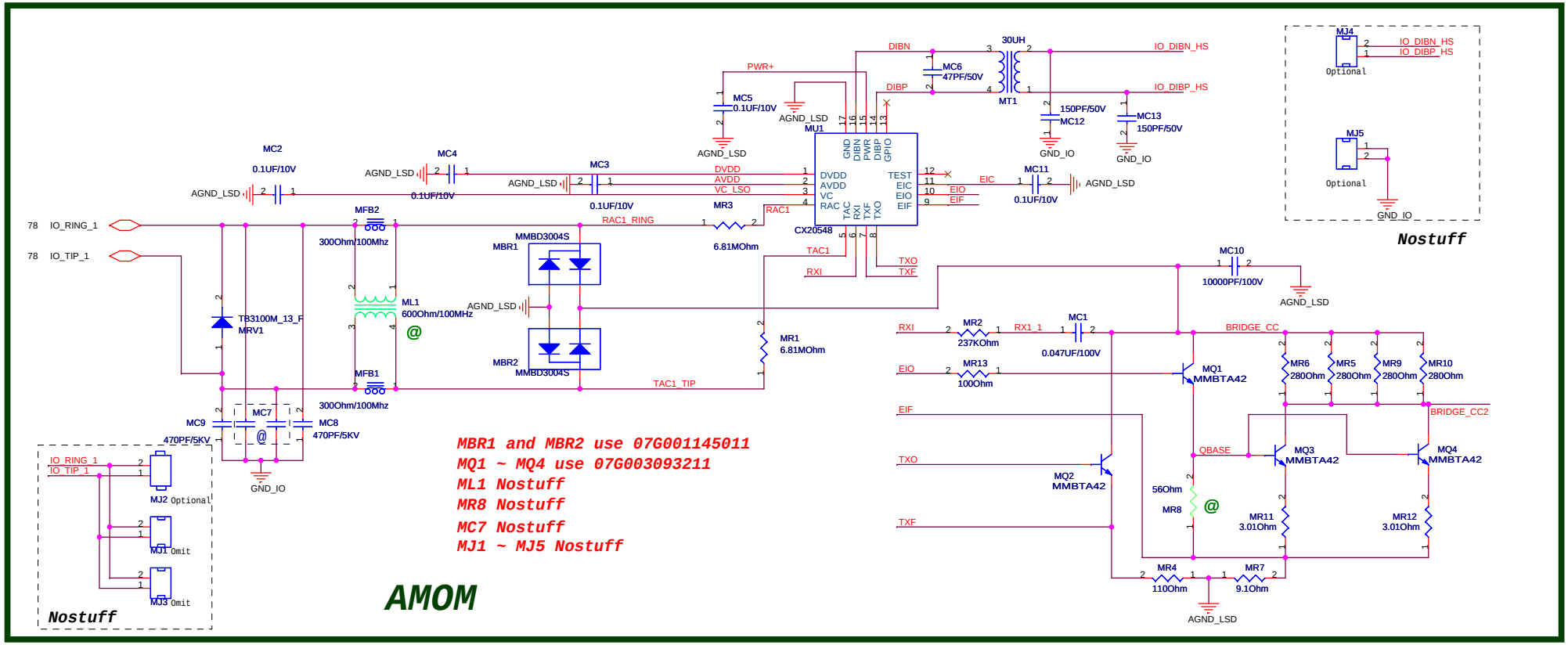

ASUS	Title : IO BRD CONN&DAA	
ASUSALPHA ODM NB1	Engineer: Warren	
Size: Custom	Project Name: Rocky 50 IO Board	Rev: 1.1
Date: Thursday, December 20, 2007	Sheet 76 of 94	

WWW.AliSaler.Com

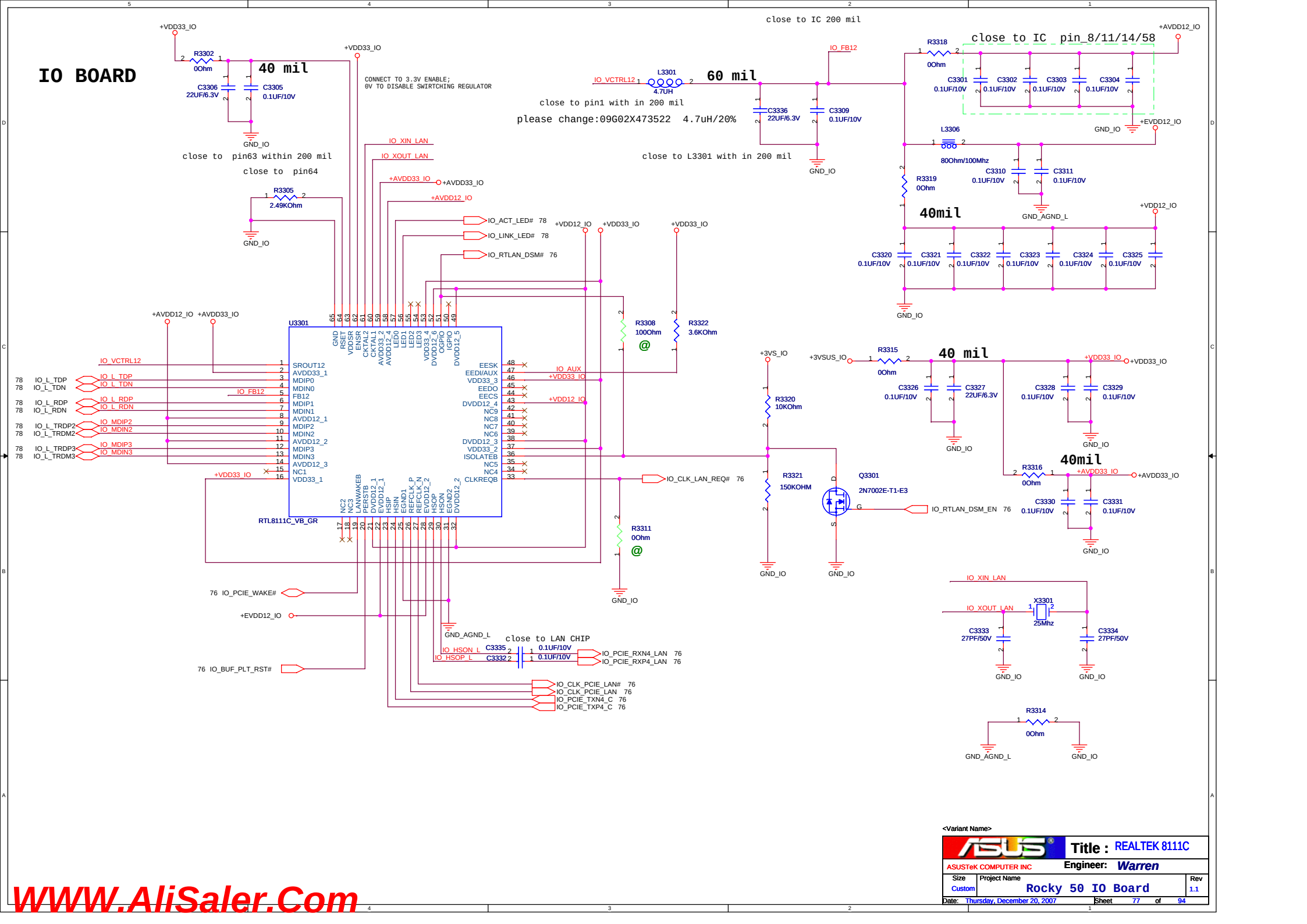
IO BOARD
40 mil
CONNECT TO 3.3V ENABLE;
0V TO DISABLE SWIRTCHING REGULATOR
close to IC 200 mil
60 mil
close to pin1 with in 200 mil
please change:09G02X473522 4.7uH/20%
close to L3301 with in 200 mil
close to IC pin_8/11/14/58
close to pin63 within 200 mil
close to pin64
40mil
40 mil
40mil
close to LAN CHIP
U3301
RTL8111C_VB_GR
Q3301
2N7002E-T1-E3
X3301
25Mhz
L3301
4.7UH
L3306
80Ohm/100Mhz
IO_CLK_LAN_REQ# 76
IO_RTLAN_DSM_EN 76
IO_PCIE_WAKE#
IO_BUF_PLT_RST#
IO_PCIE_RXN4_LAN 76
IO_PCIE_RXP4_LAN 76
IO_CLK_PCIE_LAN# 76
IO_CLK_PCIE_LAN 76
IO_PCIE_TXN4_C 76
IO_PCIE_TXP4_C 76
IO_ACT_LED# 78
IO_LINK_LED# 78
IO_RTLAN_DSM# 76
GND_IO
GND_AGND_L
+VDD33_IO
+VDD12_IO
+AVDD12_IO
+AVDD33_IO
+EVDD12_IO
+3VS_IO
+3VSUS_IO
IO_XIN_LAN
IO_XOUT_LAN
IO_FB12
IO_VCTRL12
IO_AUX
Title : REALTEK 8111C
ASUSTeK COMPUTER INC
Engineer: Warren
Size Custom
Project Name Rocky 50 IO Board
Rev 1.1
Date: Thursday, December 20, 2007
Sheet 77 of 94
WWW.AliSaler.Com

IO BOARD

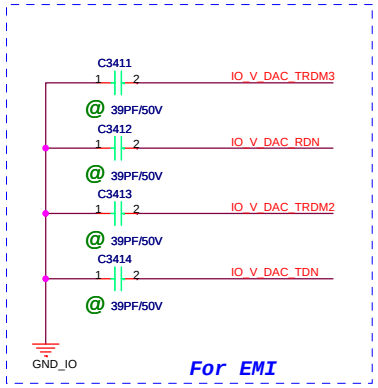

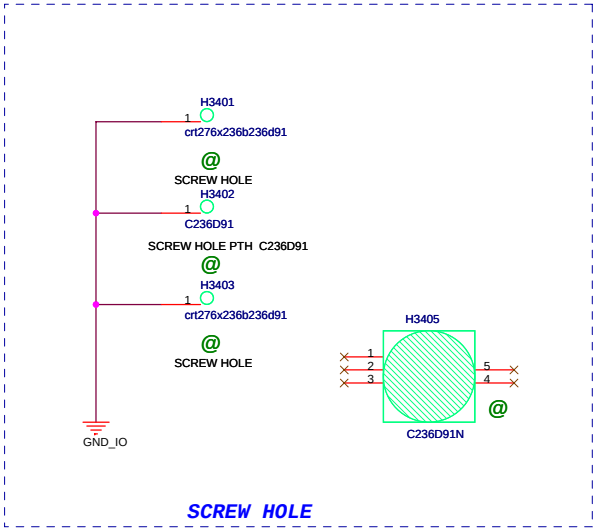

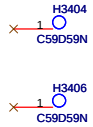

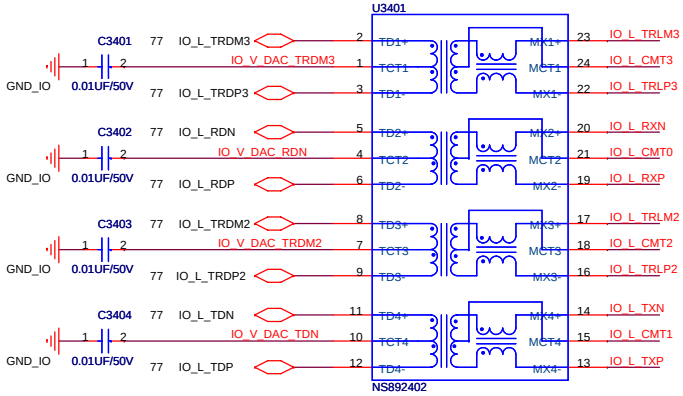

Transformer
close CN3402

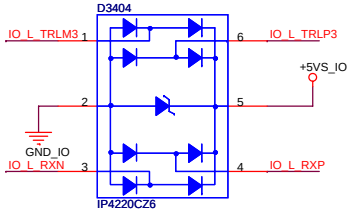

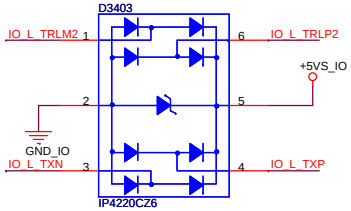

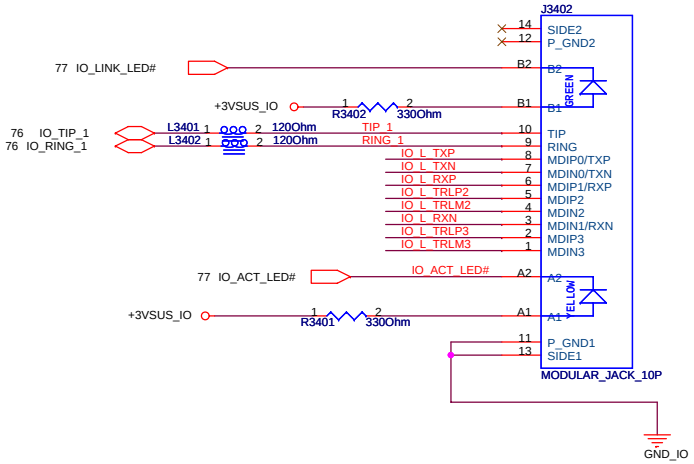

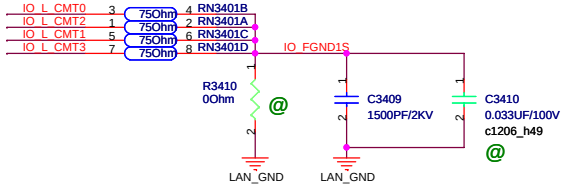

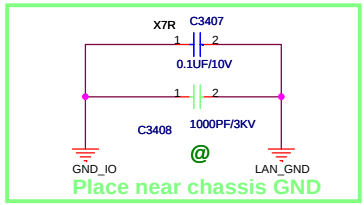

WWW.AliSaler.Com

<Variant Name>

ASUS	Title :	LAN-RJ45
ASUSTeK COMPUTER INC	Engineer:	Warren
Size: Custom	Project Name:	Rocky 50 IO Board
Rev		1.1
Date: Thursday, December 20, 2007	Sheet	78 of 94

Title : History		
Engineer: Tina Lee		
Size: A	Project Name: Rocky 40/50	Rev: 1.0
Date: Monday, December 17, 2007	Sheet 79 of 94	

WWW.AliSaler.Com

IMVP6 CPU VCORE REGULATOR

3.3V level logic level: DPRSLPVR, SHDN#
1.05V level logic: VID, PSI#, DPRSTP#
POUT=(VCSN2-VGNDS)x(CSP1-CNS1+CSP2-CSN2)/16.67mV

FSW=297.8kHz
Slewrate=12.5mV/us
VPS=-2.1mV/A

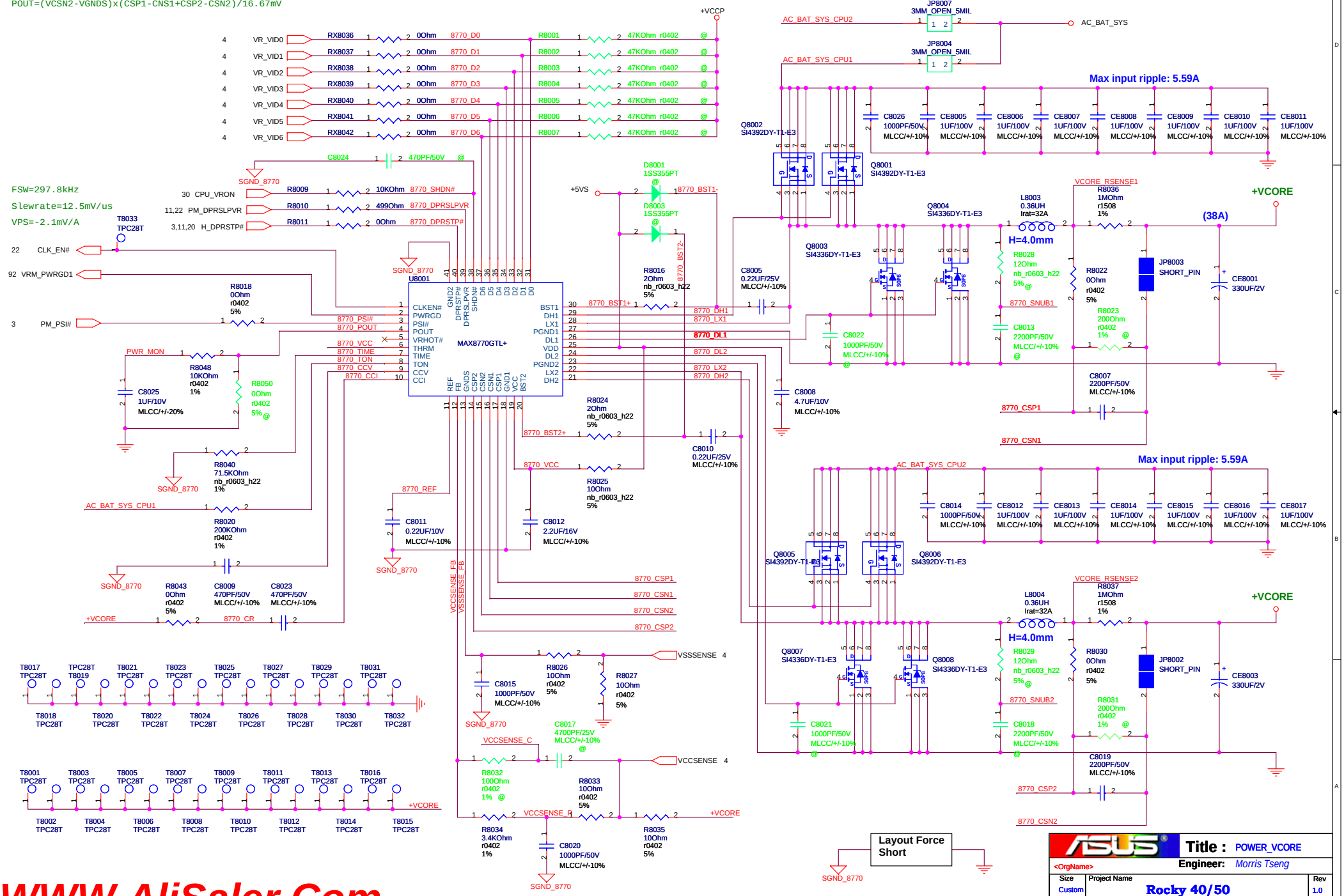

WWW.AliSaler.Com

+5V / +3.3V POWER SUPPLY

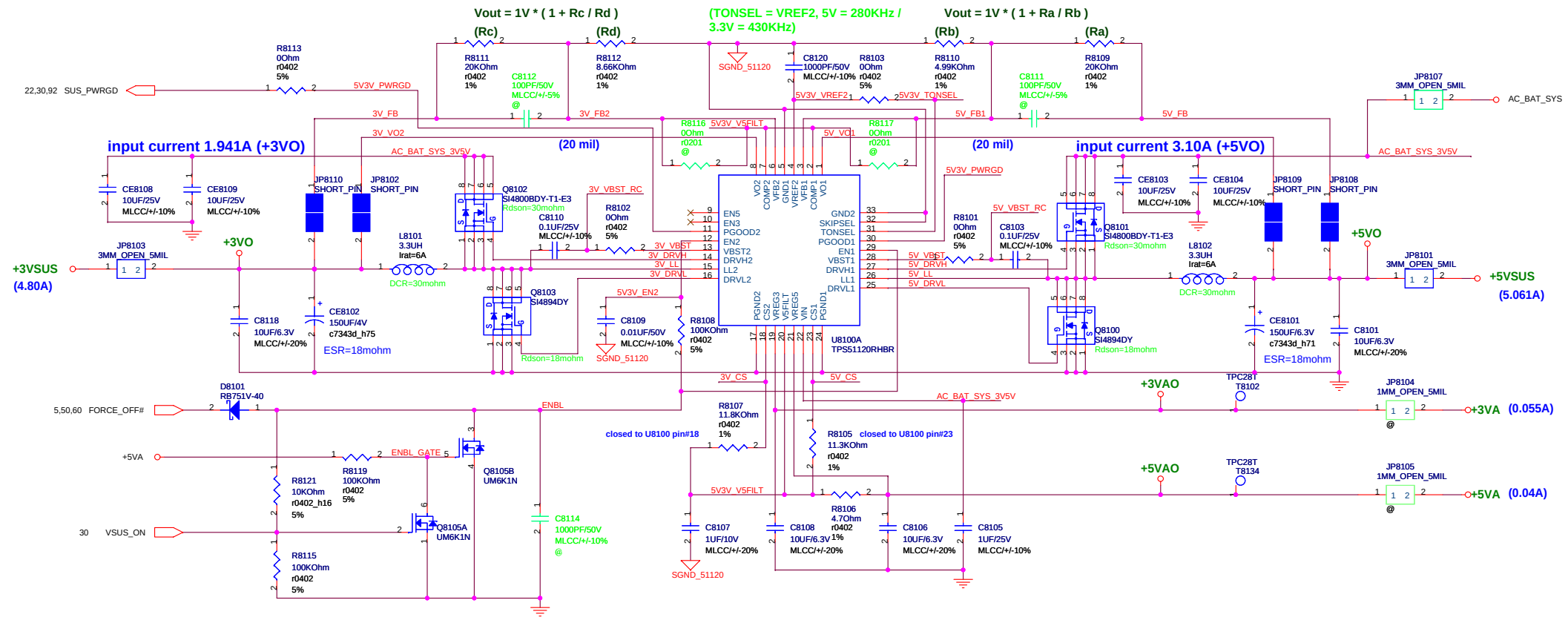

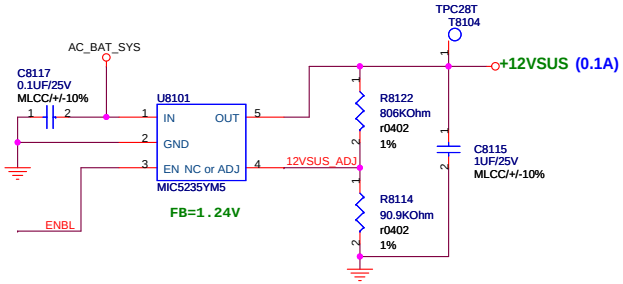

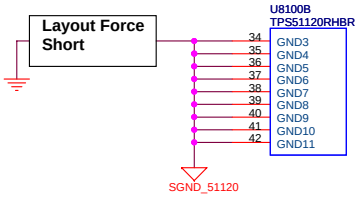

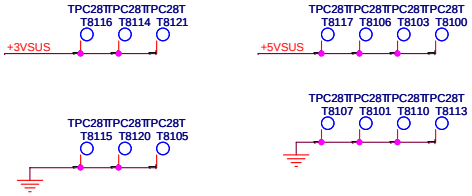

WWW.AliSaler.Com

<Variant Name>

Title : POWER_SYSTEM

<OrgName>

Engineer: Morris Tseng

Size	Project Name	Rev
Custom	Rocky 40/50	1.0

Date: Thursday, December 20, 2007 Sheet 81 of 94

+1.5VS / +VCCP POWER SUPPLY

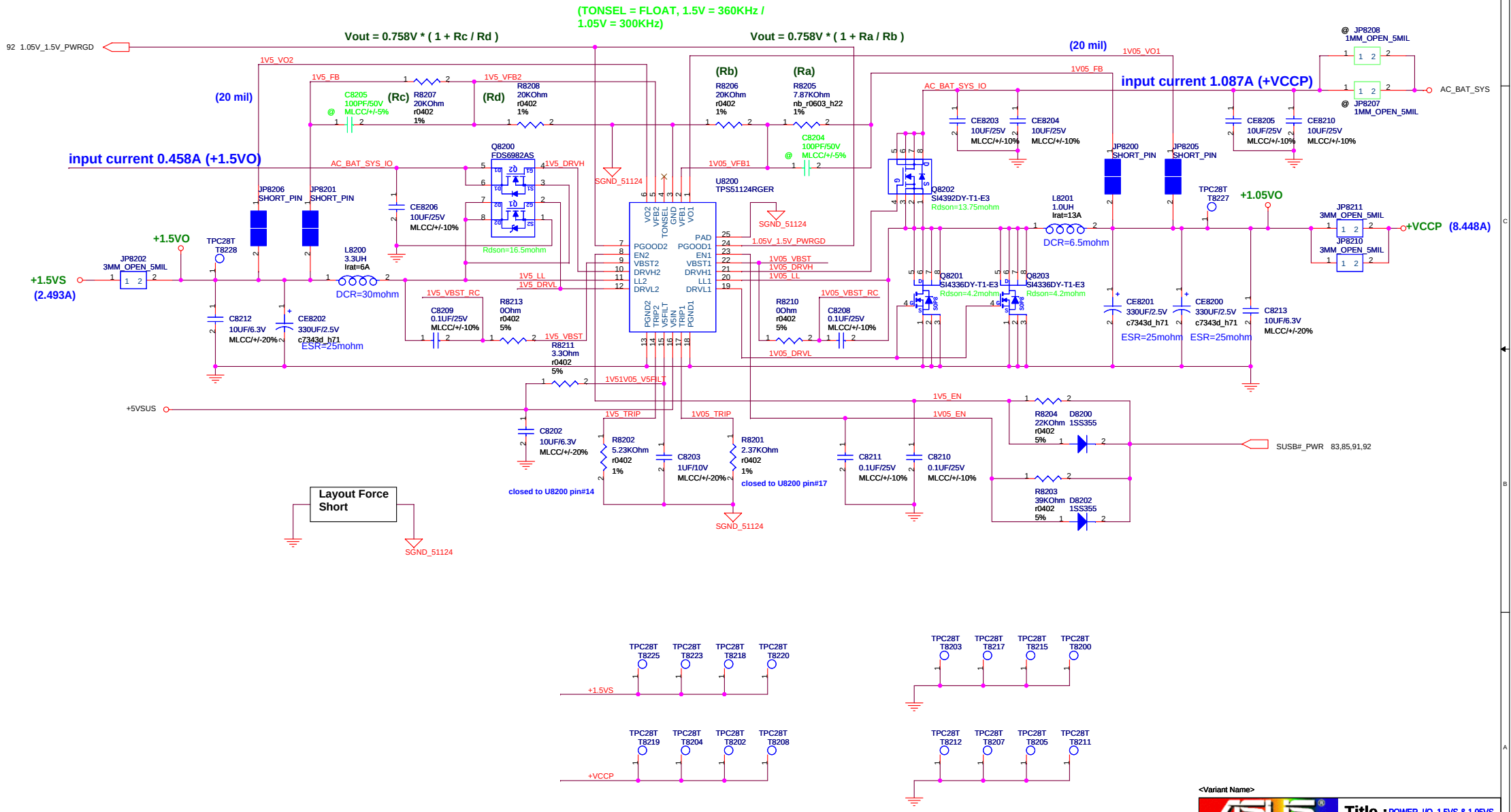

<Variant Name>

Title : POWER_I/O_1.5VS & 1.05VS

<OrgName> Engineer: Morris Tseng

Size	Project Name	Rev
Custom	Rocky 40/50	1.0

Date: Thursday, December 20, 2007 Sheet 82 of 94

WWW.AliSaler.Com

+1.8V / +0.9VS POWER SUPPLY

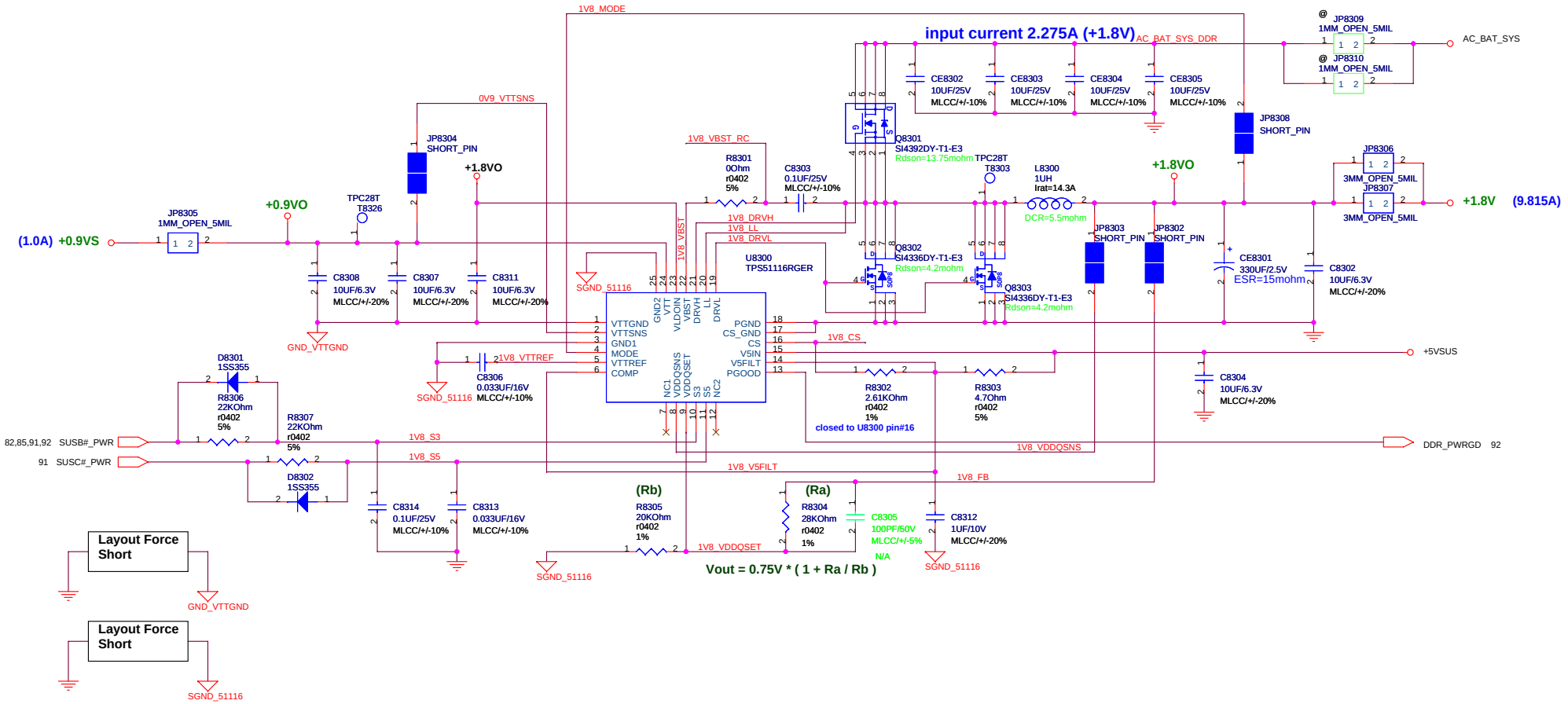

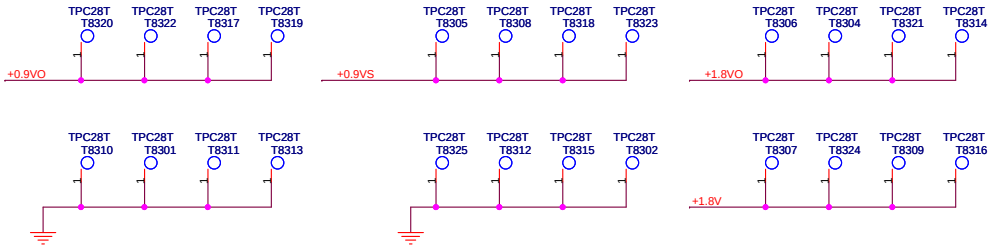

<Variant Name>

ASUS	Title : POWER_I/O_DDR & VTT	
<OrgName>	Engineer: Morris Tseng	
Size: Custom	Project Name: Rocky 40/50	Rev: 1.0
Date: Thursday, December 20, 2007	Sheet 83 of 94	

WWW.AliSaler.Com

WWW.AliSaler.Com

VGA / +1.1V POWER SUPPLY

GPU_VID1	GPU_VID0	+GPU_VCORE
HIGH	HIGH	1.17V
HIGH	LOW	1.09V
LOW	LOW	0.90V
LOW	HIGH	1.17V

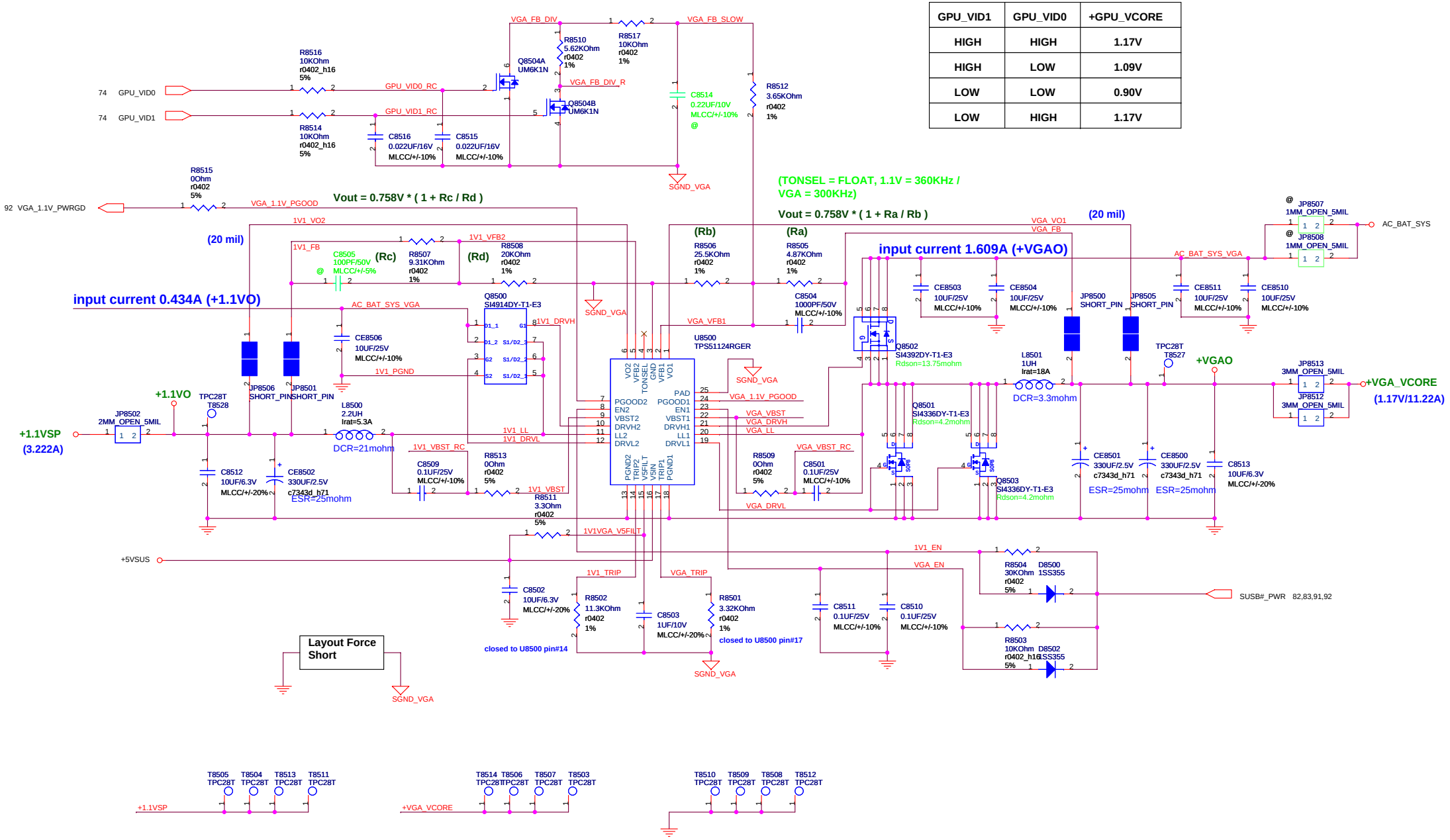

ASUS	Title : POWER_VGA & +1.1V	
<OrgName>	Engineer: Morris Tseng	
Size: Custom	Project Name: Rocky 40/50	Rev: 1.0
Date: Thursday, December 20, 2007	Sheet 85 of 94	

WWW.AliSaler.Com

ASUS	Title : PWR_-****		
<OrgName>	Engineer: Morris Tseng		
Size A4	Project Name Rocky 40/50		Rev 1.0
Date: Monday, December 17, 2007	Sheet 86 of 94		

WWW.AliSaler.Com

ASUS	Title : POWER_SHUTDOWN#	
<OrgName>	Engineer: Morris Tseng	
Size: Custom	Project Name: Rocky 40/50	Rev: 1.0
Date: Monday, December 17, 2007	Sheet 87 of 94	

WWW.AliSaler.Com

BATTERY CHARGER

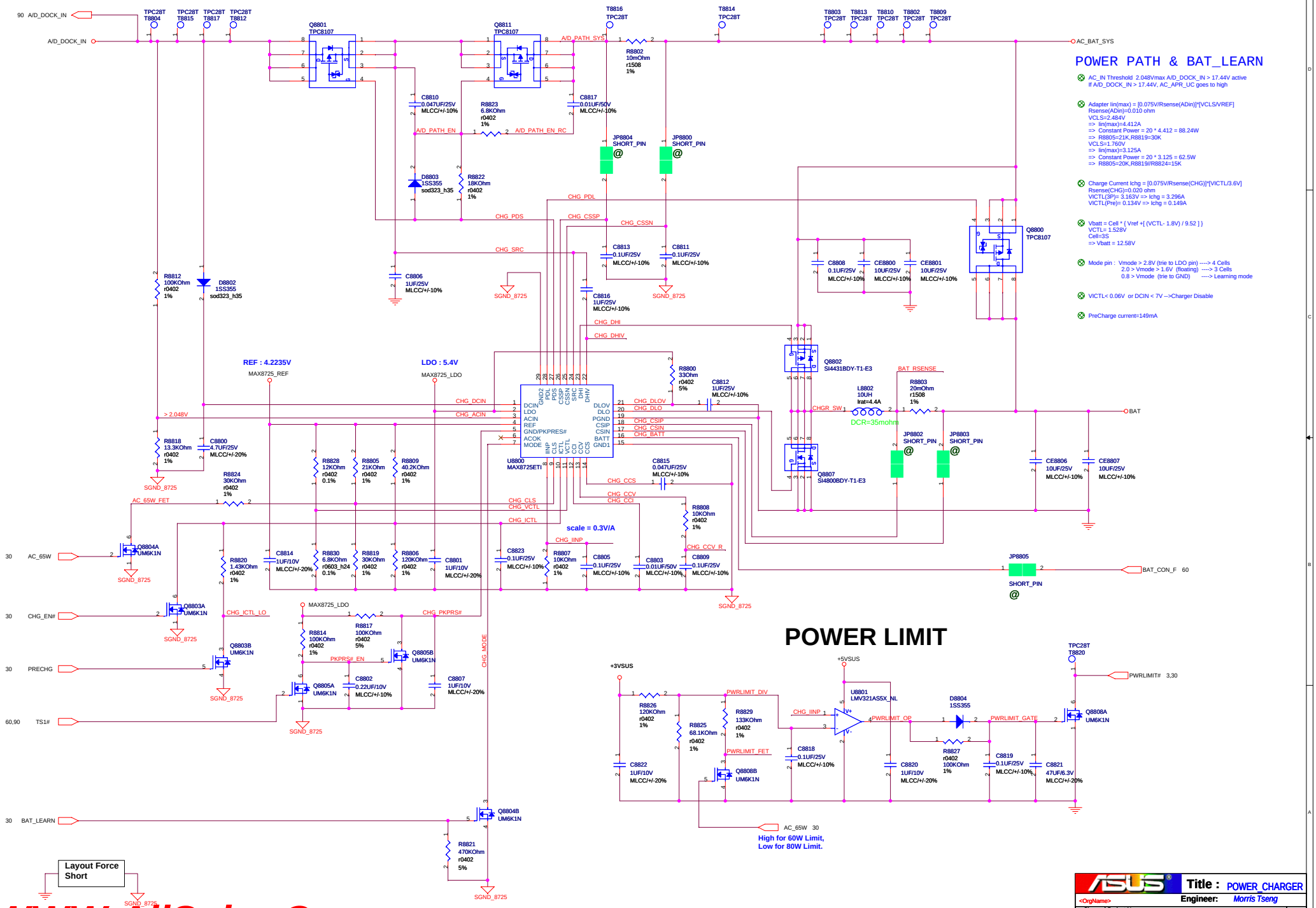

POWER LIMIT

Title : POWER_CHARGER		
<OrgName>	Engineer: Morris Tseng	
Size: C	Project Name: Rocky 40/50	Rev: 1.0
Date: Thursday, December 20, 2007	Sheet 88 of 94	

WWW.AliSaler.Com

WWW.AliSaler.Com

BATTERY IN DETECT

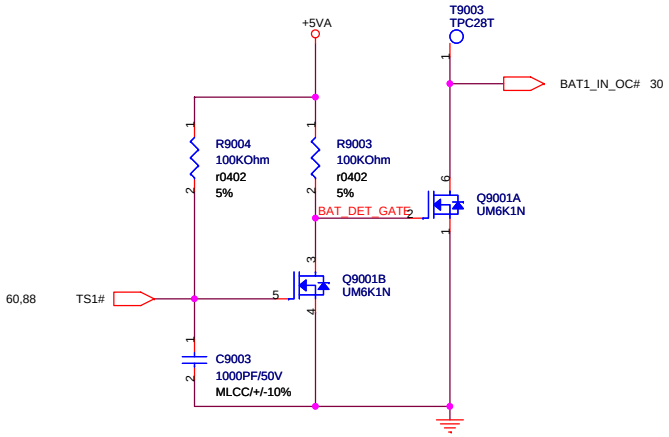

ADAPTER IN DETECT

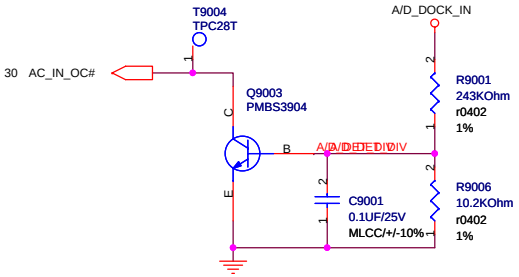

WWW.AliSaler.Com

ASUS	Title : POWER_DETECT	
<OrgName>	Engineer: Morris Tseng	
Size A3	Project Name Rocky 40/50	Rev 1.0
Date: Thursday, December 20, 2007	Sheet 90 of 94	

SUSB#_PWR Load SW

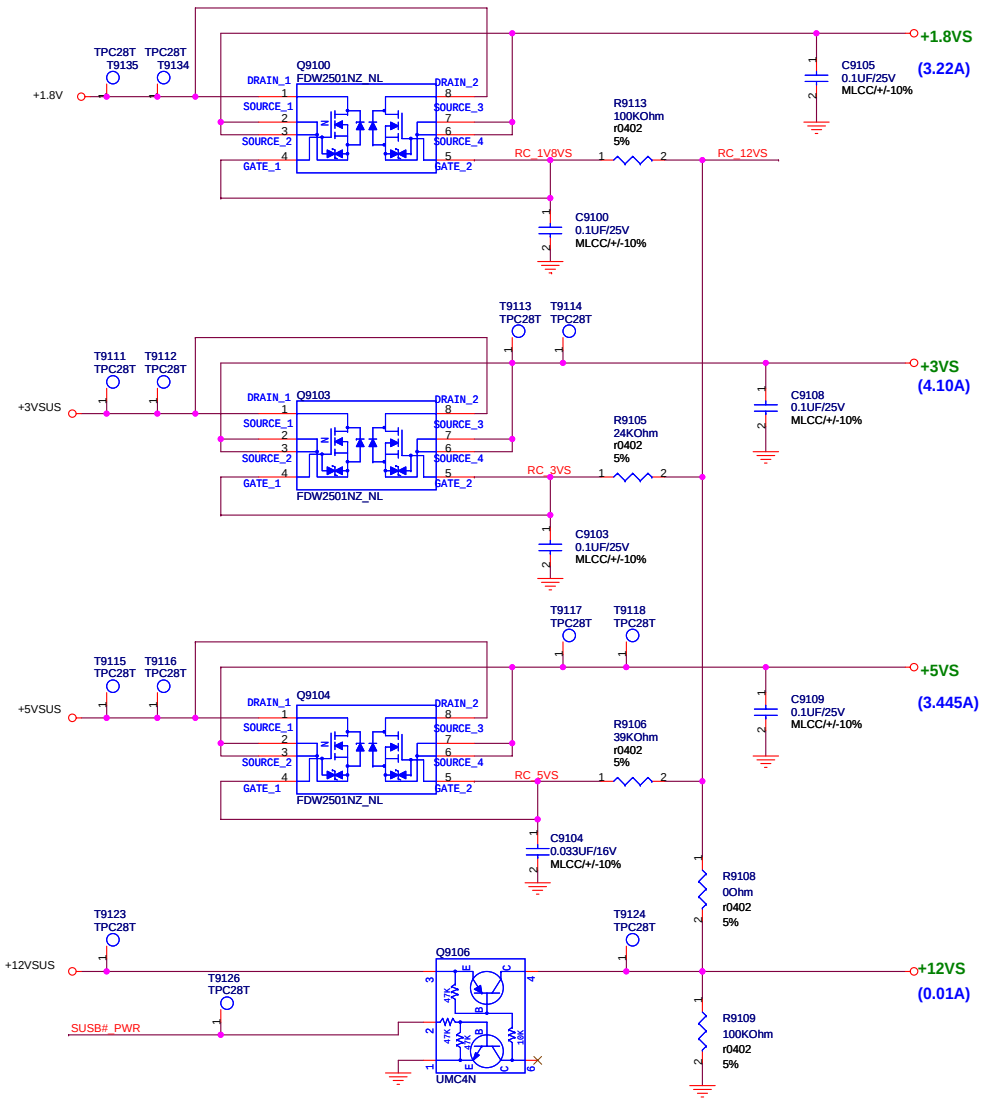

SUSC#_PWR Load SW

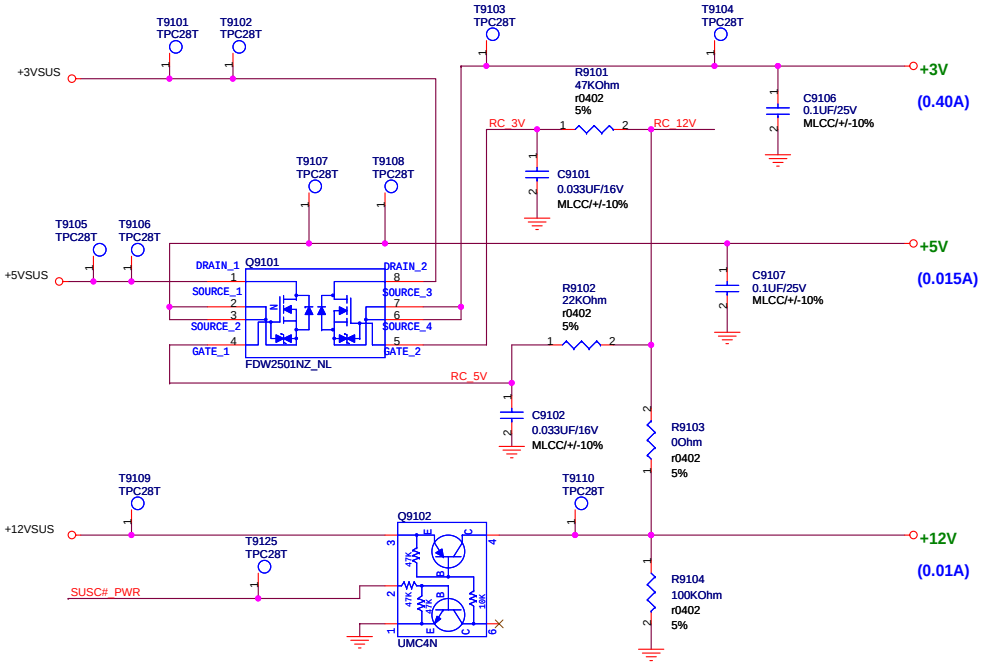

Enable Signal

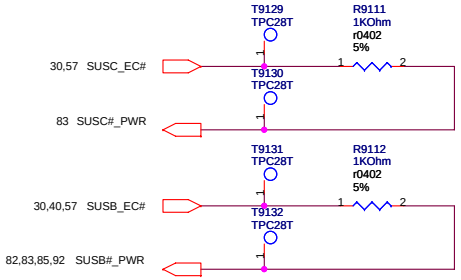

ASUS	Title : POWER_LOAD SWITCH	
<OrgName>	Engineer: Morris Tseng	
Size: Custom	Project Name: Rocky 40/50	Rev: 1.0
Date: Thursday, December 20, 2007	Sheet 91 of 94	

WWW.AliSaler.Com

POWER GOOD DETECTER

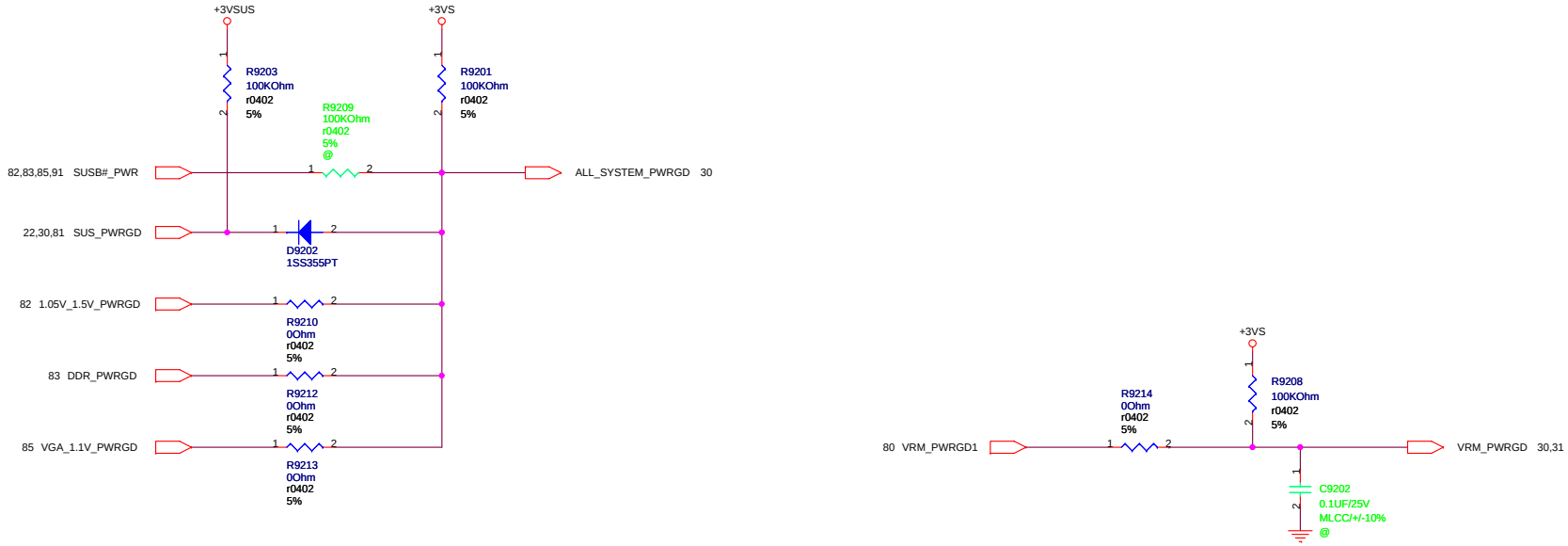

ASUS	Title : POWER_PROTECT	
<OrgName>	Engineer: Morris Tseng	
Size: Custom	Project Name: Rocky 40/50	Rev: 1.0
Date: Thursday, December 20, 2007	Sheet 92 of 94	

WWW.AliSaler.Com

AC_BAT_SYS	AC_BAT_SYS	46,60,80,81,82,83,85,88
+VCORE	+VCORE	4,5,80
+3VO	+3VO	81
+3VSUS	+3VSUS	20,21,22,23,24,25,30,37,53,81,88,91,92
+5VAO	+5VAO	81
+5VA	+5VA	81,90
+5VO	+5VO	81
+5VSUS	+5VSUS	23,52,56,81,82,83,85,88,91
+3VAO	+3VAO	81
+3VA	+3VA	20,30,31,53,57,81
+12VSUS	+12VSUS	24,52,81,91
+1.05VO	+1.05VO	82
+VCCP	+VCCP	5,10,11,13,14,20,23,29,80,82
+1.5VO	+1.5VO	82
+1.5VS	+1.5VS	4,14,23,53,57,59,82
+1.8VO	+1.8VO	83
+1.8VS	+1.8VS	57,71,72,74,75,91
+1.8V	+1.8V	7,8,9,11,13,83,91
+0.9VO	+0.9VO	83
+0.9VS	+0.9VS	9,83
BAT	BAT	60,88
+3V	+3V	21,36,42,44,53,57,59,61,91
+5V	+5V	9,44,56,57,91
+12V	+12V	37,42,91
+3VS	+3VS	3,7,8,11,14,15,20,22,23,24,25,29,30,31,40,41,45,46,48,50,51,53,57,58,59,61,70,74,75,91,92
+5VS	+5VS	23,31,36,37,45,48,50,51,53,56,57,80,91
+1.8VS	+1.8VS	57,71,72,74,75,91
+12VS	+12VS	24,45,91

ASUS	Title : POWER_SIGNAL	
<OrgName>	Engineer: Morris Tseng	
Size: Custom	Project Name: Rocky 40/50	Rev: 1.0
Date: Thursday, December 20, 2007	Sheet 93 of 94	

WWW.AliSaler.Com

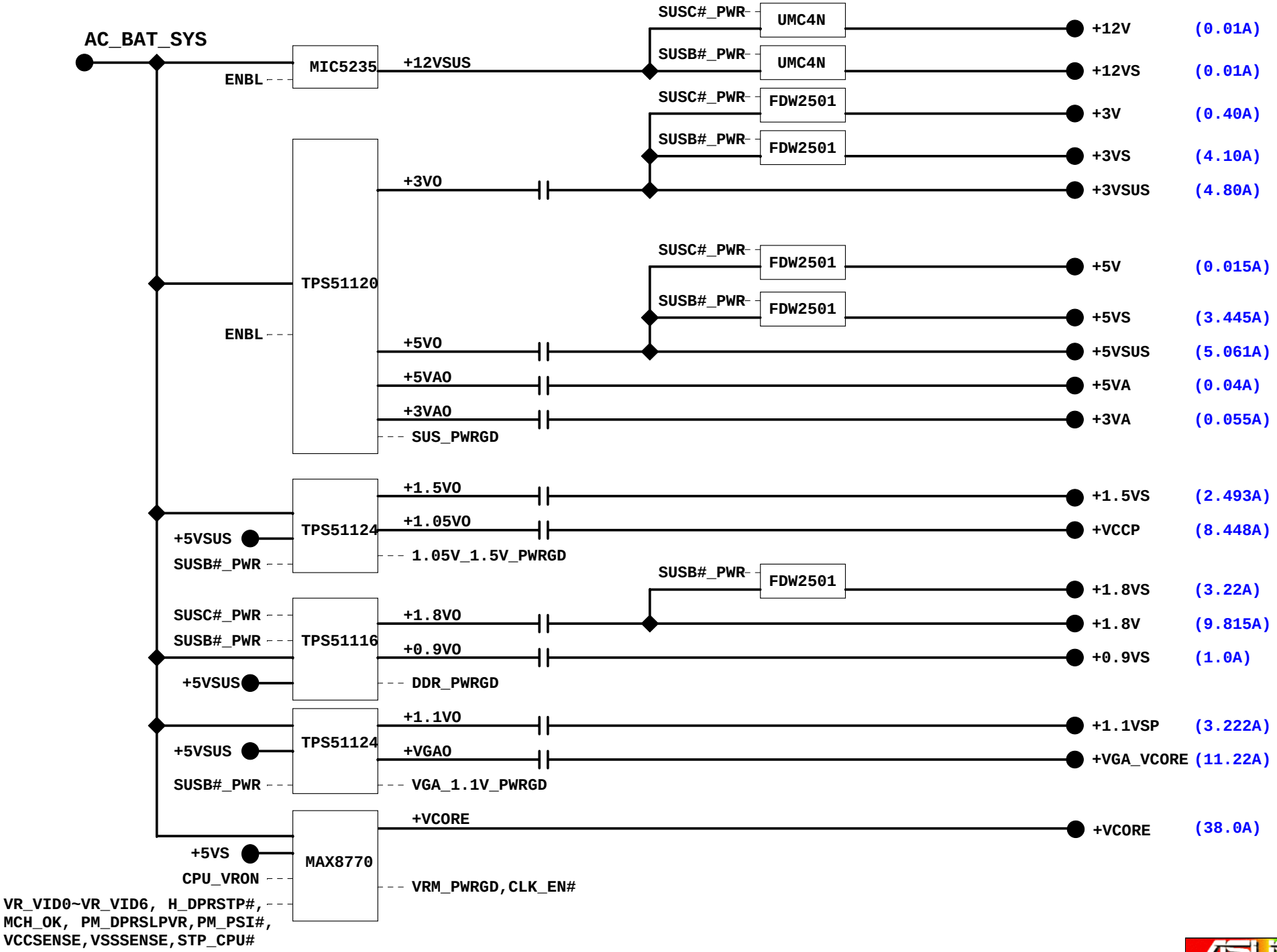

ASUS	Title : POWER_FLOWCHART	
<OrgName>	Engineer: Morris Tseng	
Size: Custom	Project Name: Rocky 40/50	Rev: 1.0
Date: Monday, December 17, 2007	Sheet 94 of 94	

WWW.AliSaler.Com